Hardware Manual

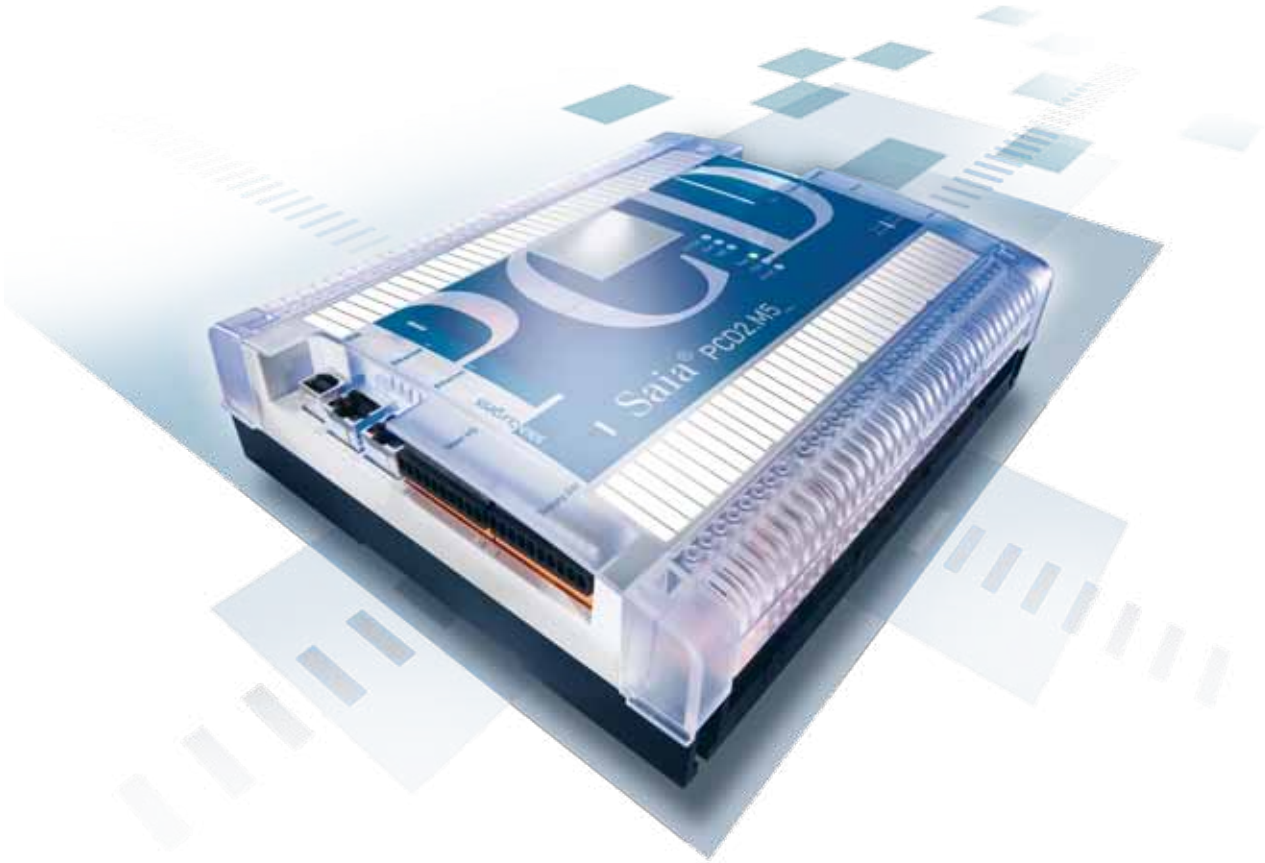

saia-burgess
Control Systems and Components

of the PCD2.M5_ series

Controls Division

Document 26/856; Version EN 09 | 2012-01-25

0

0

0

0.1 Document-History

Version	Changed	Published	Remarks
pEN01	07.01.2008	30.05.2008	New document, copied from PCD1|2|3 Manual
EN02	2009-02-16	2009-02-16	Modifications
EN02	2009-06-01	2009-06-30	Minor modifications
EN03	2009-09-30 2009-10-01	2009-10-01 2009-10-01	Control unit for PCD7.F180 “MST” → “MFT” Memory Card is called PCD2.R6000 not PCD3.R6000
EN04	2010-03-01 2010-04-13	2010-03-01 2010-04-13	Definition of the signals Port#3 or #10, Pin 6, in chapter 3.9 Chapt. 5.3.1
EN05	2010-05-10 2011-01-20	2011-01-15 2011-01-20	eDisplay in detail PCD2.C1000 added in chapter 3 Hardware Watchdog: Example of IL-Code string modified Standards added in chapter 3
EN06	2011-04-08	2011-04-11	Switch off the +24 V before plug/unplug the I/O modules and I/O terminals
EN07	2011-06-23	2011-06-23	Chapter 3: New specifications for FW upgrade, Chapter 5: LED, adjustment of status reports
EN08	2011-11-22	2011-11-25	Correction HW watchdog error. Maximum load for on-board outputs
EN09	2012-01-24	2012-01-25	Reintegrated the description of the I/O-modules

0.2 Trademarks

Saia® is a registered trademark of Saia-Burgess Controls AG.

Siemens®, SIMATIC® and STEP® are registered trademarks of Siemens AG.

Technical changes are subject to the state of technology

Published in Switzerland

1 Graphical index

The graphical index singles out some highlights from the Hardware Manual for the PCD2.M5_ Series, and allows you to click on a component/connector to jump straight to the corresponding section. The facility to jump to any section from the table of contents is still to be completed.

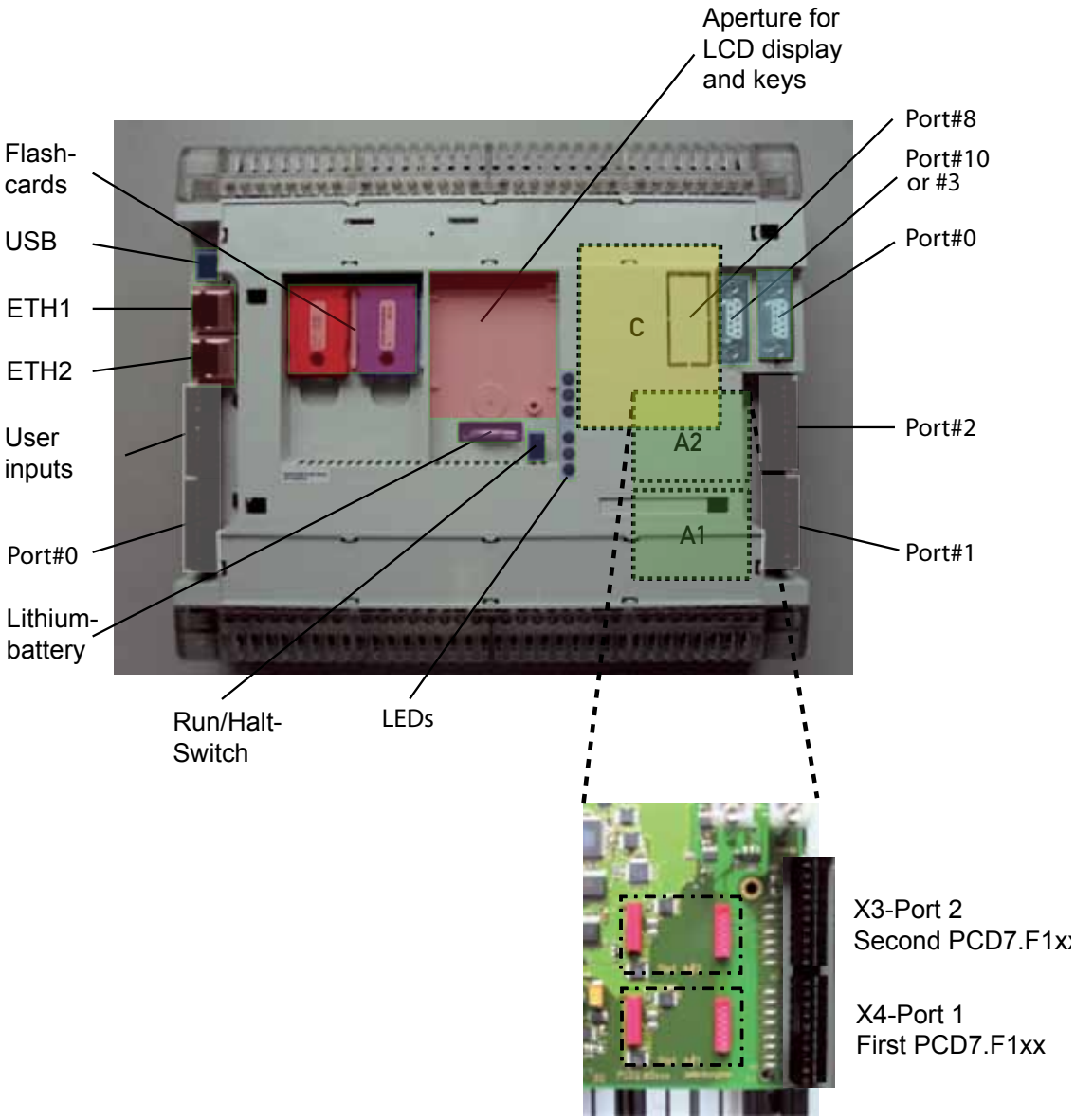

2 Overview

2.1 Introduction

This manual covers the technical aspects of the PCD2.M5_ components. The following terms are used frequently:

- CPU Central processing unit: the heart of the PCD
- LIOs Local I/Os: these are connected to the CPU via the I/O bus
- Modules Input/output elements designed for the PCD2.M5_ system
- Module holder CPU, RIO or LIO, to which modules may be attached

The aim of this section is to present the essentials of planning and installing control systems with PCD2.M5_ components. It covers the following topics:

- Planning an application
- Cabling

Details of hardware, software, configuration, maintenance and troubleshooting are described in separate sections.

2.2 Planning an application with PCD2.M5_ components

The following aspects should be considered when planning PCD2.M5_ applications:

- The internal load current taken by the I/O modules from the +5V and V+ supply must not exceed the maximum supply current specified for the CPUs or LIOs (PCD2.C2000/C1000)
- The CPU type determines the maximum number of modules
- The total length of the I/O bus is limited by technical factors; the shorter, the better

When planning an application, we recommend the following procedure:

1. Select the I/O modules according to your requirements.
2. Check that the number of module holders is allowed:

PCD type	Max. number of I/O modules			Max. [1] digital I/Os		
PCD2.M5_	PCD2 CPU	PCD2 expansion	Total	PCD2 CPU	PCD2 expansion	Total
	8	56	64	128	896 (-1)	1024 (-1)

1) Using digital I/O modules with 16 I/Os each

The values in brackets have to be subtracted from the maximum number of digital I/Os because of the watchdog relay.

To expand PCD2 CPUs with PCD3 RIOs, the planning instructions in the PCD3 Manual 26/789 should be followed.

❸ If necessary, select the PCD2.C2000/C1000 expansion housing:

- PCD2.C2000 8 module slots or PCD2.C1000 4 module slots
- PCD2.K106 26-core extension cable to connect PCD2 CPUs.
- PCD3.K1x6 26-core extension cable to connect the last PCD2.C2000 /C1000 expansion housing in a row to attached further rows of PCD2.C2000/C1000 expansion housings.
- PCD2.K010 Connector to link PCD2.C2000 expansion housings for mounting side-by-side.

For the connecing cables and plugs required, see also section 3.4.3.

❹ If PCD2.Wxxx and PCD2.Hxxx modules are used, calculate the load current at the internal +5V and V+ supply (use the worst, i.e. highest values)

❺ Check that the max. supply current for the CPU is sufficient; it generally should be.

❻ Estimate consumption from the 24 V supply. Use estimated values. The estimated values can be found in the section on the Current consumption of the PCD2 input/output modules.

! Note that in most applications the outputs place the heaviest load on the 24 V supply. For 16 outputs with a load current of 0.5 A each, the loading will be 8 A with all outputs connected.

2.3 Cabling

2.3.1 Cable routing

- 230V supply lines and signal lines must be laid in separate cables at least 10 cm apart. Even within the switching cabinet, it is advisable to leave space between power and signal lines.
- Digital signal / bus lines and analogue signal / sensor lines should be laid in separate cables
- It is advisable to use shielded cables for analogue signal lines.
- The shield should be earthed at the entry or exit to the switching cabinet. The shields should be as short as possible and of the largest possible cross-section. The central earthing point should be > 10 mm² and connected to the PE ground wire by the shortest route
- The shield is generally connected to one side of the switching cabinet only, unless there is a potential equalization with significantly lower resistance than the shield resistance
- Inductivities installed in the same switching cabinet, e.g. contactor coils, should be provided with suitable suppressors (RC elements)
- Switching cabinet components with high field intensity, e.g. transformers or frequency inverters, should be shielded with separator plates with a good ground `connection.

Surge protection for long distances or external lines

- Where lines are laid outside the building, or over longer distances, suitable surge protection measures should be applied. For bus lines in particular, these measures are essential.
- With lines laid outside, the shield must have adequate current-carrying capacity and be earthed at both ends.
- The surge conductors should be installed at the input to the switching cabinet.

2.4 Addressing

The address of a module is determined by its module position in the configuration (see section 3.4.5).

PCD2 CPUs: The module addresses begin at base address 0 (zero) on Slot 0 (addresses 0 to 15) and go up in increments of 16 to address 127 on Slot 7, regerdless of the number of I/Os (16, 8 or 4).

PCD2.C2000 and C1000: Determined by the module position in the configuration; also goes up in increments of 16

Extension cables connect the expansion housing at the right-hand end of a row with the first expansion housing at the left of the next row. The address of the first module in a second or third row equals the address of the last module in the previous row +16.

Address 255 is reserved for the watchdog relay. Modules that use this address must not be installed in module position 16. For more details, please refer to the section on the "Hardware watchdog".

Each additional PCD2.C2000/C1000 expansion housing provides space for 8/4 more I/O modules. The connection to the next row is made via the 26-core extenstion cable or the connector (see section 3.4.3).

Forces arising with too small cable radii (smaller than the natural radius) may damage the plug connection.
The extension cables must not be plugged in or removed with the controller connected to the power supply.

3 PCD2.M5xx0 CPUs and module holders

3.1 System overview

The Saia® PCD2.M5_ series is basically a combination of the PCD2 housing design and circuitry with extensive compatibility and ease of upgrading along with PCD3 technology. The proven functions of the PCD2 series have been supplemented with new functions such as USB and "onboard" Ethernet, and the facility to use flash cards and/or future SD memory cards (for program backup, file system for web pages, data, documents, etc.). For easy labelling of the I/O signals, there are preprinted sheets that can be protected by the transparent covering. I/O modules can be reconnected or replaced without removing the central housing.

The circuitry and labelling have been completely revised. When I/O modules are replaced, the electronic components on the CPU are protected. However, the I/O modules themselves must not be plugged in or removed with the power on, the supply voltage and the external +24 V must be disconnected. As with the PCD3, the CPU has no jumpers; all the required functions have to be configured in "Hardware Settings". The unit provides 4 integrated ports and two RJ45 Ethernet sockets, including switch. These make the Saia® PCD2.M5_ an extremely powerful communication system. FTP and web access are also supported directly via http.

On the motherboard there are also 6 digital inputs (4 interrupt inputs or one encoder connection) and 2 outputs. The option to configure the inputs as interrupt or encoder inputs and the outputs as pulse-width-modulated (PWM) means that the Saia® PCD2.M5_ can be used as a "low-cost solution" for machinery and systems.

Saia® S-Net networking concept

Saia® S-Net is the name of the new, flexible networking concept for innovative and economical automation systems with Saia® PCDs.

- Based on the Ethernet-TCP/IP (Ether-S-Net) and Profibus (Profi S-Net) open standards: use of existing network infrastructure → no duplicate cabling required

- Supports multi-vendor and multi-protocol operation:
  Reduces costs for project planning, programming, commissioning and maintenance by general use of Ethernet TCP/IP and Profibus with S-Net, the Private Control Network (PCN) for Saia® PCDs
- General use of web technologies via Ethernet TCP/IP and Profibus for commissioning, operation, monitoring and diagnostics
- Network connections integrated into the base unit; Profibus interface integrated into the operating system of the new Saia® PCD controllers and Saia® PCD3 RIOs (included in the base unit, at no extra charge)
- Profi S-Net with optimized protocols and services for efficient operation of Saia® PCD3 RIOs and Saia® PCD3 controllers on the Profibus
- Multi-protocol operation:
  The new Saia® PCD controllers and Saia® PCD3 RIOs support Profibus-DP and S-Net on the same socket
- Continuity and security of investment:
  All Saia® PCD systems can be integrated into almost any design using existing Profibus and Ethernet TCP/IP connections
  For further details, see Manual 26/845.

Saia® PCD web server

All Saia® PCD controllers and Saia® PCD3 RIOs come with an integrated web server as standard:

- Web browser as a tool for commissioning, support and visualization:
  Access to the Saia® web server is via standard web browsers such as Internet Explorer or Netscape Navigator. This makes the web browser, which can be operated intuitively by anyone, the standard tool for commissioning, service, support and visualization of machines, units and installations. The user can retrieve pre-defined device and system-specific HTML pages, giving access to all data on controllers and RIOs. Graphical elements (images, diagrams etc.) as well as text documents (operating and repair manuals) can also be integrated into the HTML pages, to provide a personalized user interface
- General access to any desired interfaces and networks:
  Access to the web server is available not only via Ethernet TCP/IP, but also via cost-effective standard serial interfaces (RS232, RS485, modem etc.) and via Profibus networks, throughout the system and at different levels in the network. This makes it economical to use web technology to operate and monitor even the smallest applications.
- The Saia® PCD web server is integrated into all products:
  Having a web server integrated as standard eliminates the cost of run-time licenses or additional modules. In all new Saia® PCD controllers and the Saia® PCD3 RIOs, the web server is already included in the base units, at no extra cost.

3.2 General technical details

Supply (external and internal)	
Supply voltage	24 VDC -20...+25% smoothed or 19 VAC ±15% full-wave rectified (18V DC)
Power consumption[1)]	typically 15 W
Capacity of internal 5 V bus[2)]	1,400 mA
Capacity of internal +V bus (16...24 V)[2)]	The capacity of the +V bus depends on the capacity of the 5V bus, as follows (the more precisely the 24 V are maintained, the higher the possible capacity): $24\ V^{-25\%}_{+30\%}$: 400 [mA] $24\ V^{-20\%}_{+25\%}$: $150 - \frac{I_{5\ V\ bus}}{15}$ [mA] $24\ V^{-10\%}_{+10\%}$: $260 - \frac{I_{5\ V\ bus}}{4.8}$ [mA]

1) The loads handled by the outputs and other consumers are generally more important for sizing the supply than the internal power consumption of the PCD2.M5.

2) When planning PCD2 systems, it is essential to check that the two internal supplies are not overloaded. This check is especially important when using analogue, counter and positioning modules, as these may have a very large power consumption.

It is advisable to use the “device configurator” from the PG5 2.0 which automatically calculates the internal power consumption of the modules.

Atmospheric conditions	
Ambient temperature	When mounted on vertical surface with vertically aligned terminals: 0...+55 °C In all other mounting positions, a reduced temperature range of 0..+40 °C applies
Storage temperature	-20...+85 °C
Relative humidity	10...95 % without condensation
Vibration resistance	
Vibration	according to EN/IEC61131-2: 5...13.2 Hz constant amplitude (1.42 mm) 13.2...150 Hz, constant acceleration (1 G)

Electrical safety	
Protection type	IP20 according to EN60529
Air/leakage paths	according to EN 61 131-2 and EN50178: between circuits and bodies and between electrically isolated circuits: surge category II, fouling level 2
Test voltage	350 V / 50 Hz AC for nominal unit voltage 24 VDC

Electromagnetic compatibility	
Electrostatic discharge	according to EN61000-4-2: 8 kV: contact discharge
Electromagnetic fields	according to EN61000-4-3: field intensity 10 V/m, 80...1000 MHz
Bursts	according to EN61000-4-4: 4 kV on DC supply lines, 4 kV on I/O signal lines, 1 kV on interface lines
Noise emission	according to EN 61,000-4-6: Class A (for industrial areas). Guidance on the correct use of these controls in residential areas can be found at www.sbc-support.ch (additional measures).

Noise immunity	acc. to EN61000-6-4
Mechanism and mounting	
Housing material	Base: Cover: Fibre optics: PC, crystal-clear
Mounting rail	2 top-hat rails acc. to EN50022-35 (2 x 35 mm)

Connections						
Terminal blocks	Spring terminals 10-pole, 4-pole	Spring terminals 10-pole	Spring terminals 14-pole, 12-pole, 8-pole	Spring terminals 24-pole, 6-pole	Earth terminal	Terminal 2-pole supply
Section stranded single wire	0.5..2.5 mm² 0.5..2.5 mm²	0.5..2.5 mm² 0.5..2.5 mm²	0.5...1.5 mm² 0.5...1.5 mm²	0.5...1.0 mm² 0.5...1.0 mm²	0.08... 2.5 mm²	0.5... 1.5 mm²
The terminal blocks may only be plugged onto 20 times. They must then be replaced, to guarantee a reliable contact						
Length of insulation	7 mm	7 mm	7 mm	7 mm	5...6 mm	7 mm

Standards / approvals	
EN/IEC	EN/IEC61131-2 “Programmable controllers”
Shipbuilding	ABS, BV, DNV, GL, LRS, PRS. Please verify if your chosen product is mentioned in the list of corresponding Type-Approval-Company under www.sbc-support.ch.
cULus-listed	Please verify if your chosen product is listed in the corresponding Certificate under www.sbc-support.ch. The condition for cULus Compliance are mentioned on the sheet annexed to the product or can be required under www.sbc-support.ch.

3.3 System resources

3.3.1 Program blocks

Type	Quantity	Addresses	Remarks
Cyclic organization blocks (COB)	32* (16)	0...31 (0...15)	Main program elements
Exception/system-dependent organization blocks (XOB)	32	0...31	called from the system
Program blocks (PB)	1000* (300)	0...999 (0...299)	Sub-programs
Function blocks (FB)	2000* (1000)	0...1999 (0...999)	Sub-programs with parameters
Sequential blocks (SB) total 6000 steps and transitions each (with PG5 ≥ 1.3 and firmware version ≥≥ xxx)	96	0...95	for Graftec programming of sequential processes

* This information is valid for firmware 1.10.16 and later. Before this version 16 COBs, 300 PBs and 1000 FBs were supported.

3.3.2 Computation ranges for count types

Type		Remarks
Integers	– 2,147,483,648 to + 2,147,483,647	Format: decimal, binary, BCD or hexadecimal
Floating point numbers	– 9.223,37 × 10^{18} to – 5.421,01 × 10^{-20} + 9.223,37 × 10^{18} to + 5.421,01 × 10^{-20}	Instructions are provided to convert values held in Saia format (Motorola Fast Floating Point, FFP) to IEEE 754 format and vice versa.

3.3.3 Media

Type	Quantity	Addresses	Remarks
Flags (1 bit)	14’336** (8192)	F0...8191	By default, flags are not volatile, but a volatile range can be configured, beginning with address 0
Registers (32 bit)	16384	R 0...16383	For integer or floating point values
Text/data blocks	8191	X or DB 0...8190	The texts 0..3999 are always written to the same memory area as the user program. Where the user memory has been extended, the base memory can be configured to hold RAM texts and DBs. The texts and DBs held in this way have addresses ≥ 4000
Timers/counters (31 bit)	1600[1)]	T/C 0...1599	The breakdown of timers and counters is configurable. Timers are periodically decremented by the operating system; the basic time unit can be set between 10 ms and 10 seconds
Constants with media code K	any		Values 0...16383; may be used in instructions instead of registers
Constants with no media code	any		Values - 2,147,483,648 to +2,147,483,647. Can only be loaded into a register with an LD command, and cannot be used in instructions instead of registers.

1) The number of timers configured should be only as many as required, to prevent unnecessary CPU loading
** Since firmware 1.14.23 14’336 flags are supported, before it was 8192. In order to use flags > 8191 PG5 2.6.150 is required.

3.4 PCD2.M5_ CPUs

Differences between base units PCD2.M	**5440**	**5540**
General features		
I/O bus extension	yes	
Number of inputs/outputs or I/O module sockets	up to 1023[1) 2)] 64	
Processor (Motorola)	CF 5272 / 66 MHz	
Processing time Bit instruction: Word instruction:	0.3...1.5 µs[3)] 0.9 µs[3)]	
Firmware, firmware update (firmware memory soldered on)	Downloadable from the PG5 environment	
Programmable with PG5	from 1.4.200	
Main memory for user program, text, DB (RAM)	1 MB	
Backup memory onboard (Flash)	1 MByte flash card (optional)	
Hardware clock Accuracy	Yes, better than 1 min/month	
Data backup	Renata CR2032 lithium battery, 1...3 years [4)]	
User inputs Max. input frequency	4 1 kHz[5)]	
User outputs	2	
Interfaces		
Programming interface	USB [6)]	
Optional serial data interface Port 1, 2	2 x RS232, RS422/485 or TTY current loop 20 mA	
Port 0 (PGU) also as RS232 interface (D-Sub) or RS485 (X5 terminal block), up to 115 kbit/s	✓	
Profi-S-Net interface	Port 10 up to 1.5 Mbps	
Ether-S-Net interface		2

Differences between base units PCD2.M	**5440**	**5540**
Field bus connections		
Serial-S-Net	✓	
Profi-S-Net	✓	

1) Using digital I/O modules PCD2.E16x or A46x with 16 I/Os each

2) On all PCD units, address 255 is reserved for the watchdog. The I/Os reserved for the watchdog cannot be used, and no analogue and H modules can be used on the sockets with base address 240

3) Typical values; the processing time is dependent on the load on the communication ports

4) The period given is a buffer time; it is dependent on the ambient temperature (a higher temperature means a shorter buffer time)

5) The 1 kHz applies with a pulse/pause ratio of 1:1 and refers to the total frequencies of the inputs

6) The USB port is type "USB 1.1 Slave Device 12 Mbps" and can only be used for programming and as an S-Bus Slave, together with certain software products (Webconnect, ViSi-PLUS with S-Driver).
With a USB 2.0 hub, the download runs twice as fast

Can also be used as a serial data port, e.g. to connect a terminal; but this hampers commissioning and trouble-shooting with the debugger

3.4.1 Block diagram for PCD2.M5_

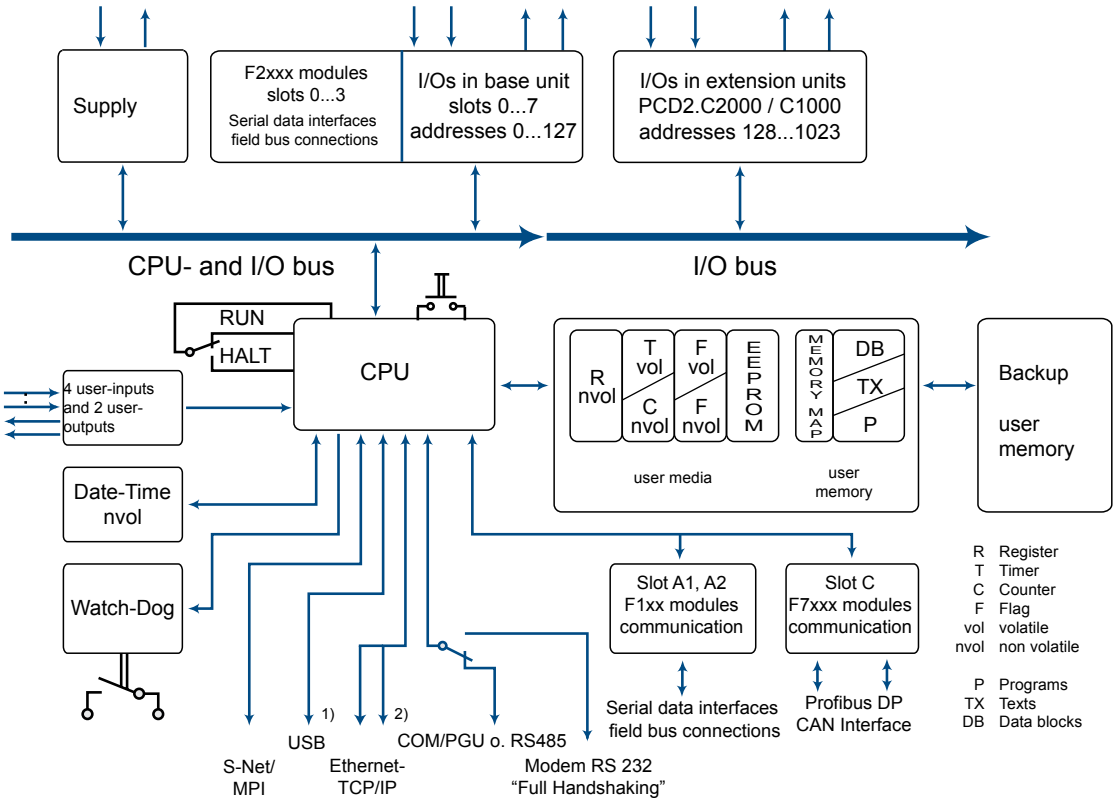

1) Connection for the programming unit
2) With PCD2.M5540

No changes (e.g. plugging/unplugging I/O modules) should be made with the power switched on.

To prevent loss of data, batteries should be changed with the power switched on.

3.4.2 Hardware and firmware versions for the PCD2.M5_

The firmware for the PCD2.M5_ is stored in a Flash EPROM, soldered to the motherboard. A firmware update can be applied by downloading a new version with the PG5. The procedure is as follows:

- Go to www.sbc-support and download the latest firmware version
- Establish a connection between PG5 and the CPU, as when downloading an application (according to the facilities available, serial with PGU cable, modem[1)], USB, Ethernet)
- Open the Online Configurator and go offline
- From the Tools menu, select “Update Firmware”, then use the Browse function to select a path to the file for the new firmware version. Ensure that only one file is selected for download
- Start the download
- After the download, the power supply to the PCD must not be interrupted for 2 minutes (CPLD programming sequence). Otherwise, the CPU may be blocked in such a way that it has to be returned to the factory.
  The download operation is terminated by rebooting the PCD.

1) A modem connection is not always reliable. A modem may become blocked in such a way that remote access is no longer possible. In such cases, an on-site visit will be necessary. Other connection options are preferable.

3.4.3 Extensions with various module holders

The PCD2.M5_ controllers can be expanded with PCD2.C2000/C1000 components, making additional module sockets available. Up to 7 PCD2.C2000/C1000 module holders can be connected to the PCD2.M5_ . This allows the user to attach a maximum of 64 I/O modules, or 1023 digital inputs/outputs.

For local expansion, the PCD2 LIO (local I/O) modules can be used.

For decentralized expansion using Profibus, the PCD3 RIO (remote I/O) modules can be used:

When selecting I/O modules, ensure that the internal 5V and +V supply is not overloaded.

The PCD2.M5_ controllers can be expanded with PCD2.C2000/C1000, PCD3.Cxx0 or PCD2.C1x0 components, making additional module sockets available:

PCD2.M5_ type	
Maximum number of inputs/outputs or I/O module sockets for the system:	
Expansion with PCD2.C2000/C1000 components	1023[1)2)] 64
Expansion with PCD3.Cxx0 components	1023[1)2)] 64
Expansion with PCD2.C1xx components	255[1)2)] 16

1) Using digital I/O modules PCD2/3.E16x or A46x with 16 I/Os each

2) On all PCD2 units, address 255 is reserved for the watchdog. The I/Os reserved for the watchdog cannot be used, and no analogue and H modules can be used on the sockets with base address 240

Connection cables or plugs required

Type of expansion	**PCD2.C150**	**PCD2.C100**	**PCD3.C100/.C200**	**PCD2.C2000/ C1000***
Max. expansion housings or module holders	1	1	14	7
Max. plug-in I/O modules	4	8	56	56
Max. additional digital I/Os	64	127	895	895
Connecting cable or	PCD2.K1x0		PCD2.K106 PCD3.K1x6	PCD2.K106 PCD3.K1x6
Connector			PCD3.K010	PCD2.K010*
Restrictions	No	No	Max. 6 PCD3.C200	*In preparation

3.4.4 Expansion housings

The PCD2.C2000/C1000 expansion housing provides space for 8/4 additional I/O modules and can be expanded to provide up to 64 sockets. The dimensions of the housing match those of the PCD2.M5_ base unit. The sockets are numbered clockwise from the left, from 0 to 7. The expansion housings with sockets 8 to 15 etc. are also numbered clockwise. They are connected to each other and to the base unit with 26-wire expansion cables or connectors:

PCD2.K010 Connector for mounting side-by-side

Internal supply to PCD2.C2000/C1000 module holders

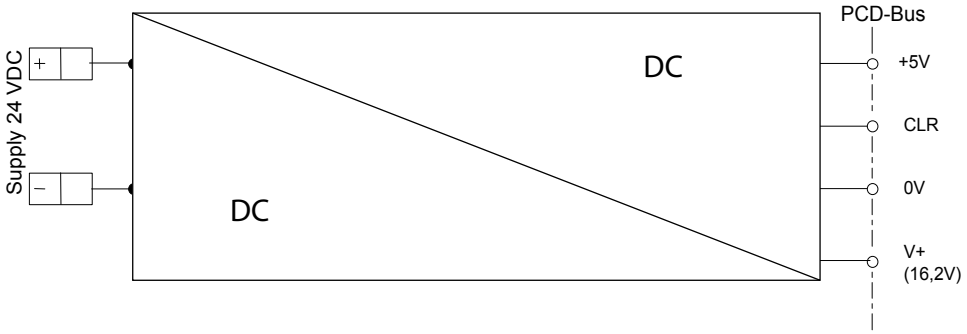

The PCD2.C2000/C1000 module holders provide the following internal supply currents to the modules plugged in or connected to them:

	power supply		power consumption
Type			
PCD2.C2000/C1000	1,400 mA	800 mA	typically 2W

When planning PCD2 systems, it is essential to check that the two internal supplies are not overloaded. This check is especially important when using analogue, counter and positioning modules, as these may have a very large power consumption.
It is advisable to use the calculation table at www.sbc-support.ch.

The PCD2.LIOs are also snapped onto two 35 mm hat rails.

LIO module holder	Module slots	Description	Ext. supply	Int. supply I at +5 V
PCD2.C2000 (PCD2.C1000)	8 (4)	for 8 (or 4) I/O modules; acts as I/O bus repeater and provides internal +5V and V+ for a segment of I/O modules	24 VDC	1,400 mA

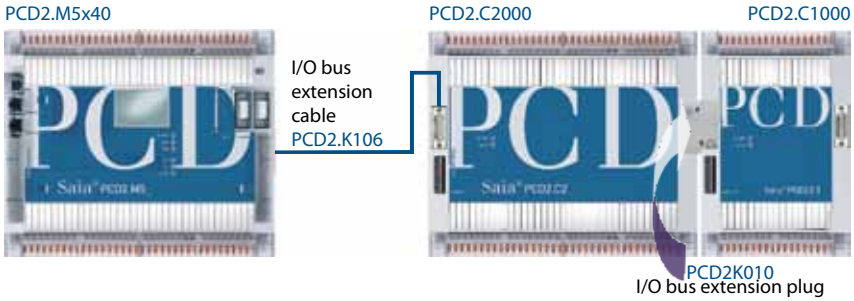

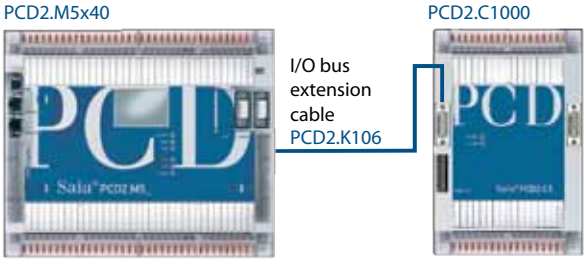

- PCD2.C2000 and PCD2.C1000 serve as a bus repeater and provide +5V and V+ internally for a segment of I/O modules.
- The order of the expansion housings is freely selectable.
- Expansion housings of the PCD3 serie (PCD3.C100, PCD3.C110 and PCD3.C200) can also be used.

Connections for PCD2.C2000 expansion housing

LEDs

24 VDC (yellow): ○ Supply present (19 V...32 VDC)
Power fail (red): ● Short-circuit (+5 V or V+ not present)

Expansion connection

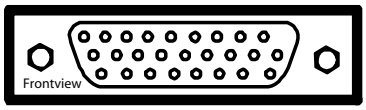

This connector can be used to connect the PCD2.C2000/C1000 expansion housing to further PCD2.C2000/C1000 units, with the PCD2.K010 connector or with connection cables. This allows up to 1023 digital I/Os to be supported.

Power supply to expansion housings

Pin	Designation	Meaning
29	Power fail	+5 V or V+ not present
28	Power good	Power supply present
27	COM	Shared connection
26	n.c.	not connected
25	n.c.	not connected
24	-	GND
23	-	GND
22	+	+24 V
21	+	+24 V
20	+	+24 V

The PCD3.Cxxx expansion housing provides space for 4 additional I/O modules. The dimensions of the housing match those of the PCD3.M3xx0 base unit (see also PCD3 Manual 26/789). They are connected to each other and to the base unit with 26-wire expansion cables or connectors (see Section 3.4.3)

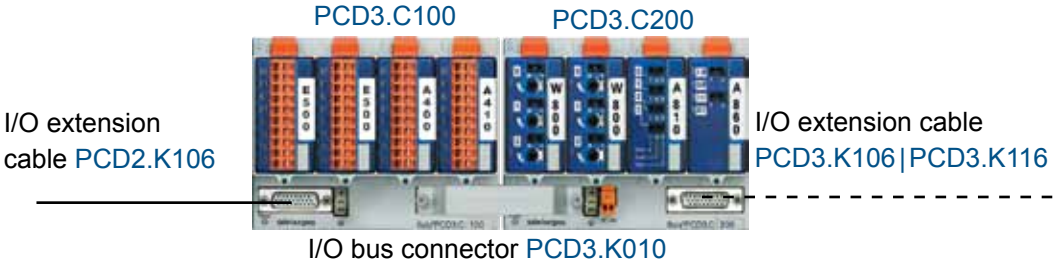

Up to 1023 central data points in PCD3.C100 /.C110 /.C200

The PCD2.C1x0 expansion housing provides space for 8 or 4 additional I/O modules and can be expanded to provide up to 16 sockets. The dimensions of the housing match those of the PCD2.Mxxx base unit. They are connected to each other and to the base unit with 26-wire expansion cables (see Section 3.4.3)

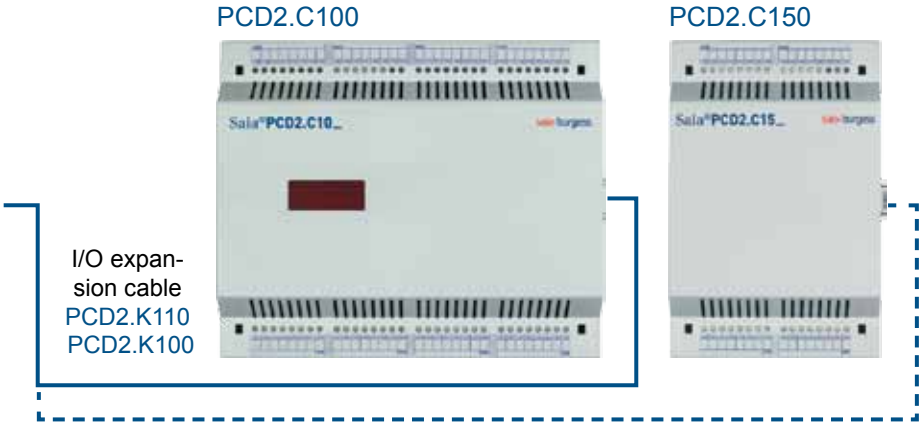

Up to 255 central data points in PCD2.C100 / .C150

Minimum distance between PCD2.M5xxx and PCD2.C2000/C1000

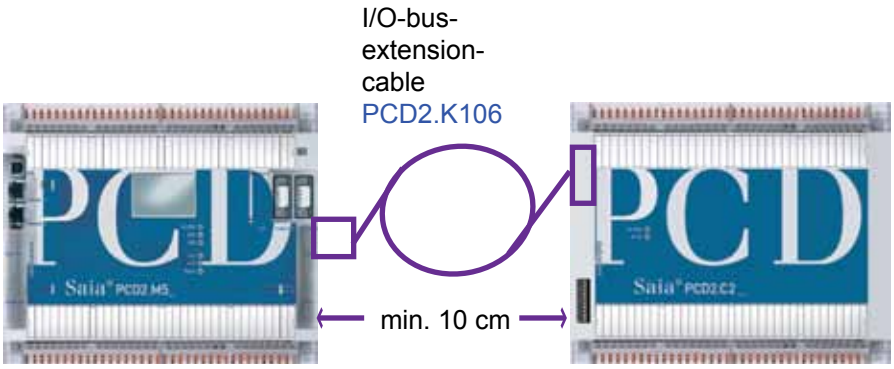

3.4.5 Addressing of module holders and modules

Sockets numbered clockwise from 0 to 7.
All modules of types E, A, W and H can run in any socket, except Slot 15 (grey). No modules of type W or H can be plugged in here. If the manual and emergency control modules are needed, PCD3 modules and module holders have to be used. The same applies to the realisation of RIO nodes. For these applications, refer to the PCD3 Manual 26/789

The PCD2.T8xx modems cannot be used on all slots; please refer to Manual 26/771 for these modules.

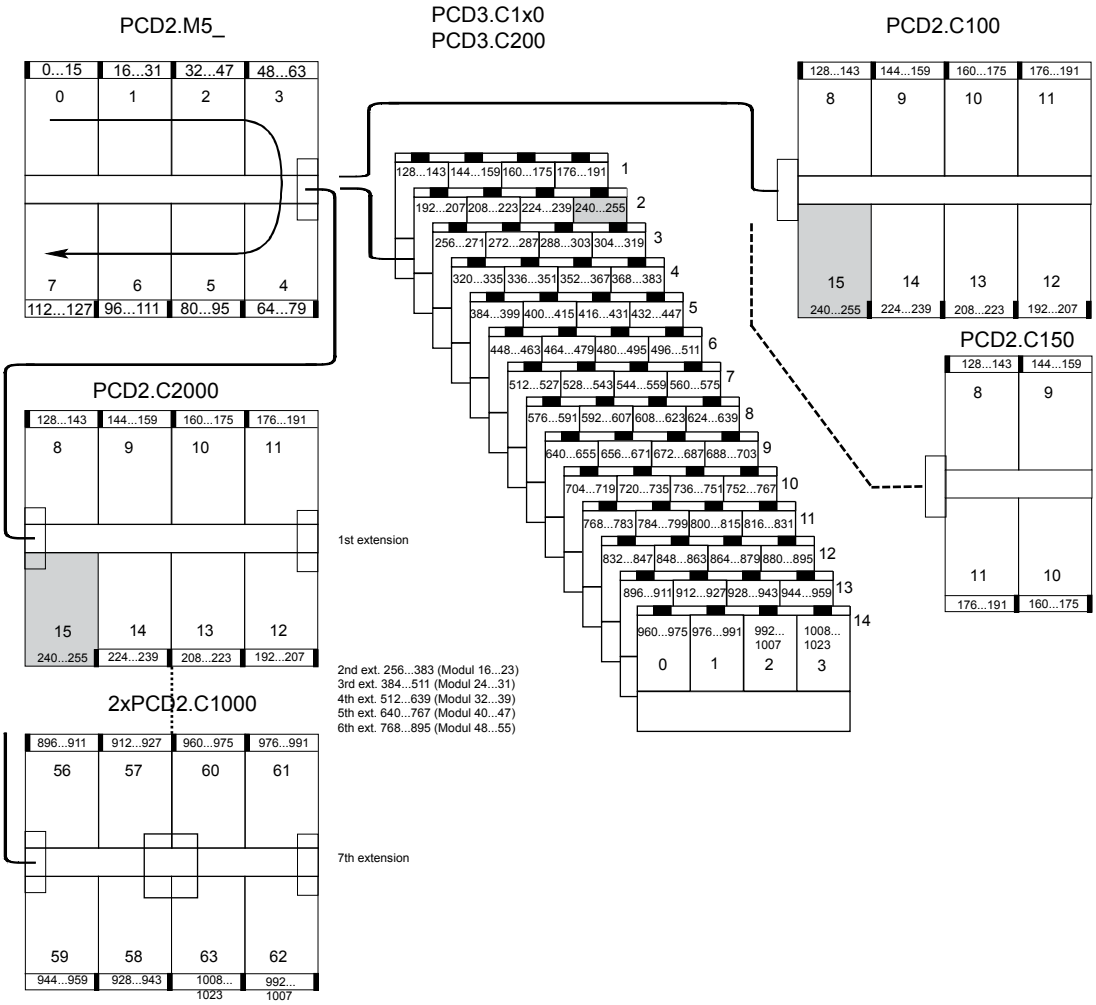

3.4.6 Decentralised expansion of RIO with PCD3 components

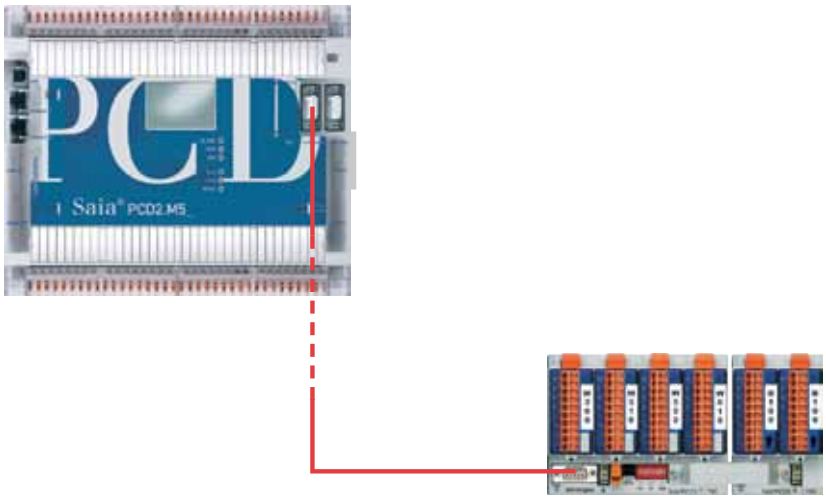

For decentralized expansion via Profibus, the PCD3 RIO (Remote I/O) modules can be used (see also manual 26/789):

PCD3.T760 Integrated Profibus DP Slave / Profi S-Net Slave connection up to max. 1.5 MBit/s
4 plug-in I/O modules
Integrated web server for diagnostics, support and commissioning (Connection to PC via optional PCD3.K225 connector cable)

PCD Type	Max. number of PCD3 I/Os
PCD3.RIO nodes	256 per node

3

3.4.7 Dimensions

PCD2.M5-,PCD2.C2000

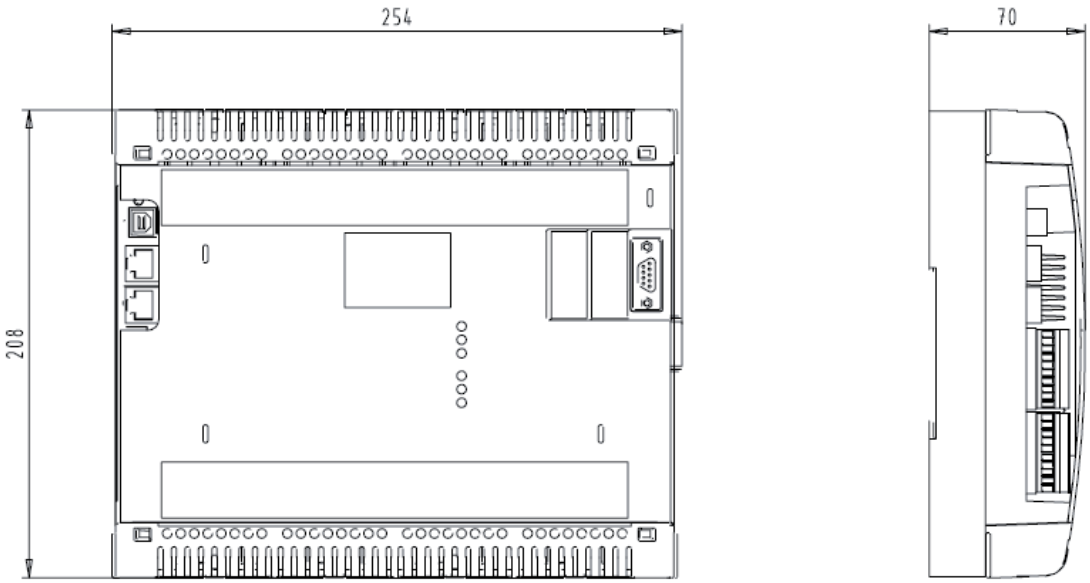

PCD2.C1000

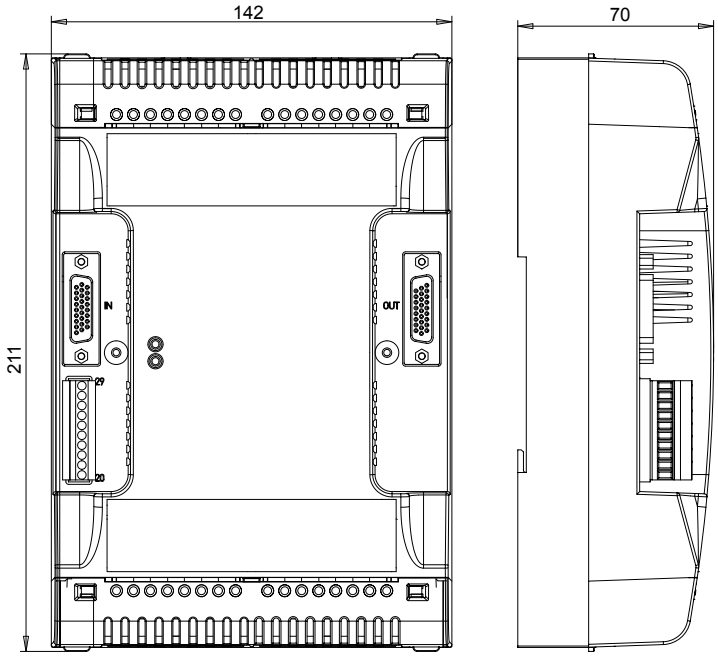

3.5 Mounting

The PCD2 can be snapped onto two top-hat rails (2 x 35 mm). The PCD2 can also be screwed to any other flat surface with 4 M4 screws; the grooves provided for this purpose can be accessed by lifting off the snap-on cover.

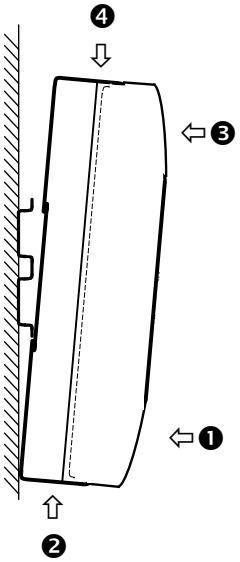

Mounting the PCD2 on the top-hat rail

❶ Press bottom of housing onto the mounting surface

❷ Press upwards against the top-hat rail

❸ Press top of housing against the mounting surface and snap into place

❹ Push the housing down onto the top-hat rail to ensure that it is secure

Removal

To remove the housing, push upwards and pull out.

3.5.1 Mounting position and ambient temperature

A vertical surface is normally used to mount the module carrier; the I/O connections to the modules then also run vertically. In this mounting position, the ambient temperature may be from 0 °C to 55°C. In all other positions, air convection works less well, and an ambient temperature von 40 °C should not be exceeded.

3.5.2 Remove cover from housing

NB: Do not use earlier methods. They may cause damage.

Grip both sides of the housing with the fingers and push to the left.

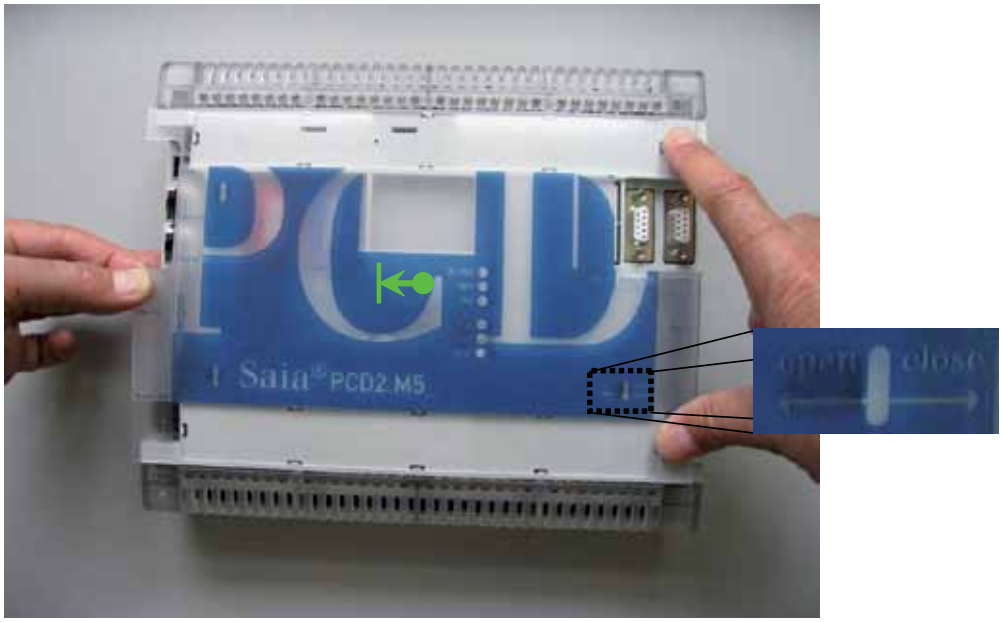

After removing the cover, the plug boards for flash cards, the lithium battery, the run/halt switch etc. are freely accessible.

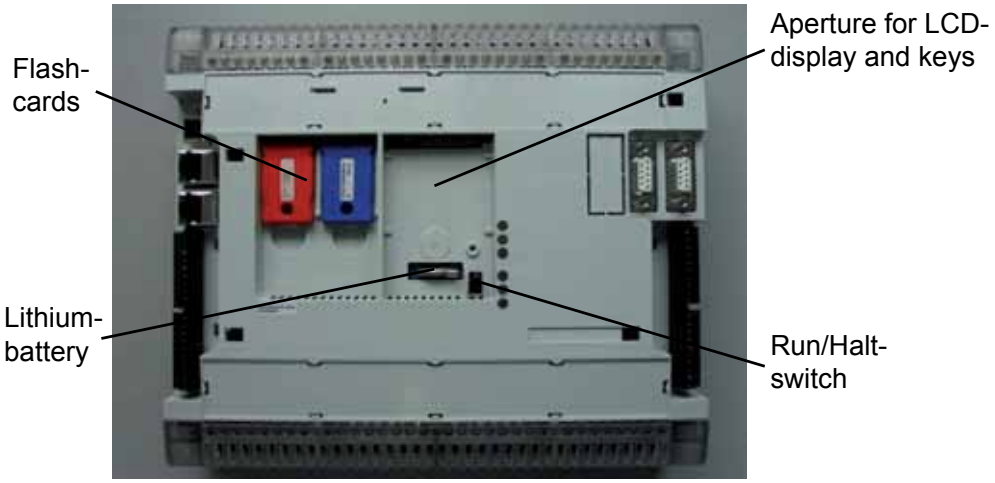

3.5.3 Replace housing cover

In the reverse order; position the 4 clips of the housing cover in the 4 grooves on the housing (see below),

press down with the fingers (see below) and push the housing cover to the right.

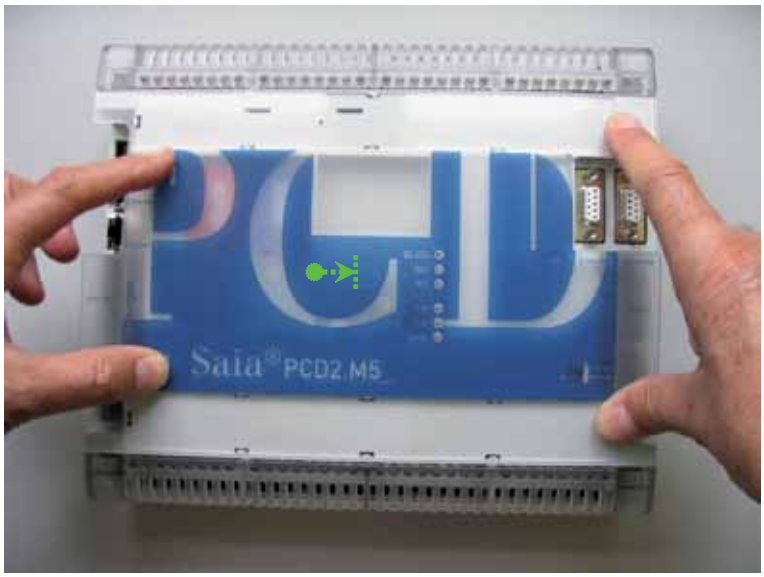

3.5.4 Remove upper part of housing

To install (new or replacement) communications interfaces, the upper part of the housing has to be removed.

- Disconnect all cables (USB, Ethernet, Profibus, RS232).
- Remove housing cover (see Section 3.5.2 Removing the housing cover)
- Pull out plug-in screw terminal blocks (X3…X6)
- Unscrew the two TORX Plus 10IP bolts (for the position of the two bolts, see below)
- Remove upper part of housing

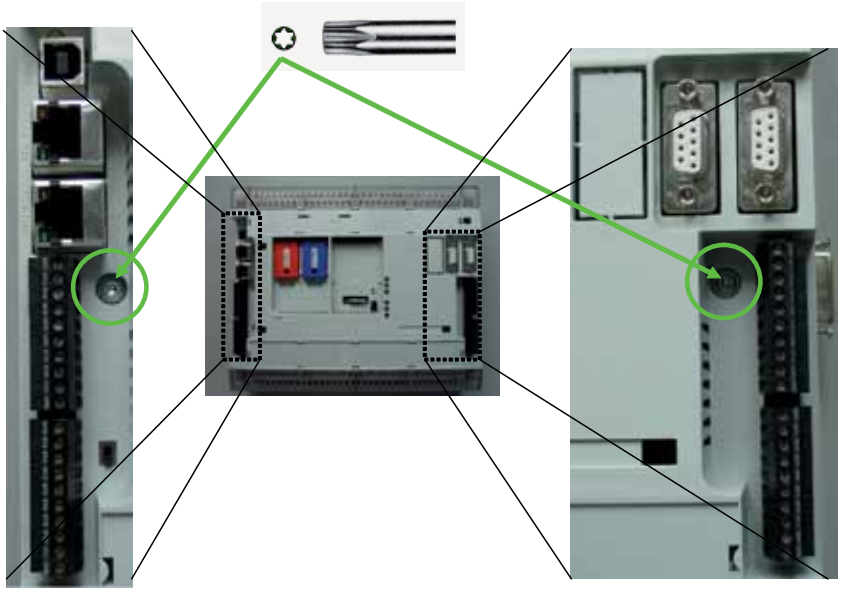

Optional communication interfaces

To simplify customer installation, optional communication interfaces should be ordered together with the PCD2.M5_. Up to two PCD7.F1xx units can be plugged into Slots A#1 and A#2.

The following PCD7.F1xx communication modules can be plugged into Slots A#1 and A#2:

- PCD7.F110
- PCD7.F121 (PCD7.F120 must not be used)
- PCD7.F130
- PCD7.F150
- PCD7.F180

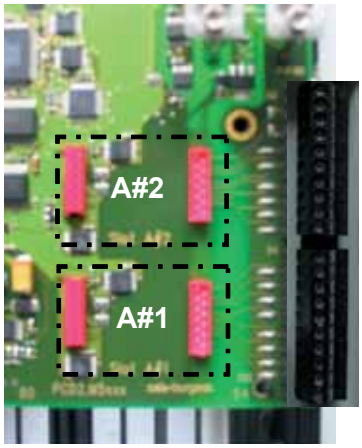

X3-Port 2
2. PCD7.F1xx

X4-Port 1
1. PCD7.F1xx

X4 - Port #1

All PCD7.F1xx modules can be used here without restriction (for RS232, use PCD7.F121 only).
(See also latest manual for the connection layout for the PCD7.F1xx)

The PCD2.T81x/.T85x internal modems must be inserted into I/O module slot #4 (bottom right), to allow them to use the TTL interface on Port#1.

X3 - Port #2

All PCD7.F1xx modules can be used here without restriction (for RS232, use PCD7.F121 only).
(See also latest manual for the connection layout for the PCD7.F1xx)

X10 - Port#8

(For Profibus DP/CAN and future communication modules; in preparation for Slot C)

3.5.5 Replace housing cover

- Position upper part of housing over the CPU
- Before pressing down, ensure that all plug-in connections are correctly positioned and connected
- Then tighten both Torx Plus bolts. Replace housing cover.

To ensure that the PCD works properly (earthing), the upper part of the housing must be screwed back on.

3.5.6 I/O module slots

All PCD2.Axxx/.Bxxx/.Exxx/.Gxxx/.Hxxx/.Wxxx I/O modules can be plugged into the 8 available I/O module slots. The PCD2.T81x/.T85x internal modems, which use the TTL interface, must be plugged into Slot 4 (bottom right).

The first 4 slots (addresses 0...63) are fitted with SPI interfaces for intelligent modules (e.g. PCD2.F2xxx, but not yet available).

The PCD2.M5_ has removable I/O covers. The I/O plug connectors can now be accessed without removing the plug-in terminal blocks (X3...X6), and the circuit board is thus protected.

To remove the I/O cover, place the thumbs on the I/O housing cover and push the I/O cover away with the fingers.

I/O covers (Slot#0 to #3 and Slot#4 to #7)

3.6 Installation and addressing of PCD2 I/O modules

3.6.1 Insertion of I/O modules

The I/O module is inserted from the side, pushed towards the middle of the unit until it reaches the end stop, and snapped into the retaining catch.

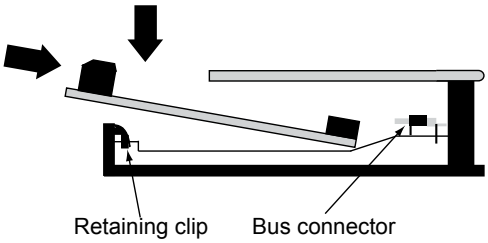

No changes (e.g. plugging/unplugging jumpers or I/O modules) should be made with the power switched on.

3.6.2 Address and terminal designation

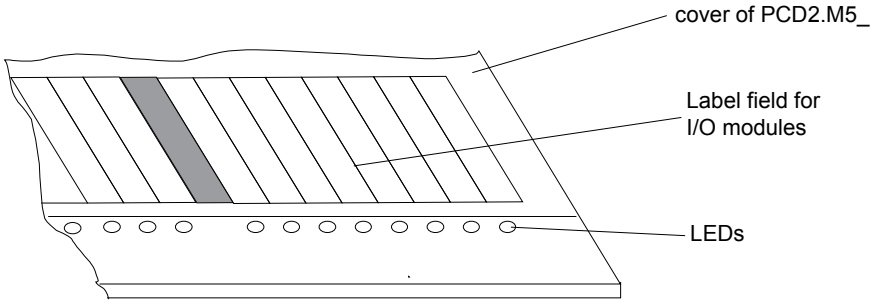

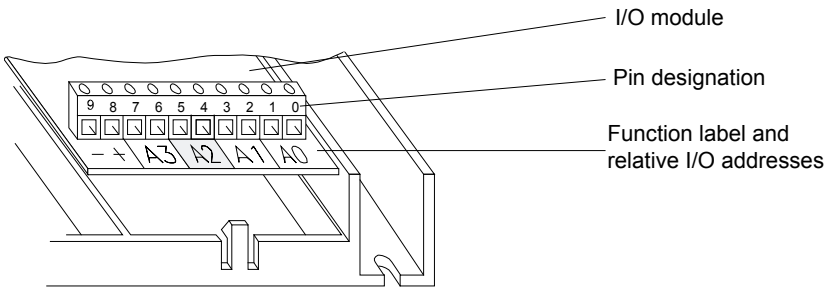

All PCD2 systems are provided with a set of matching A4 templates

Removing the cover gives access to terminals, but also exposes components that are sensitive to electrostatic discharges.

3.7 Power supply, earthing scheme, cable layout

3.7.1 External power supply

Simple, small installations

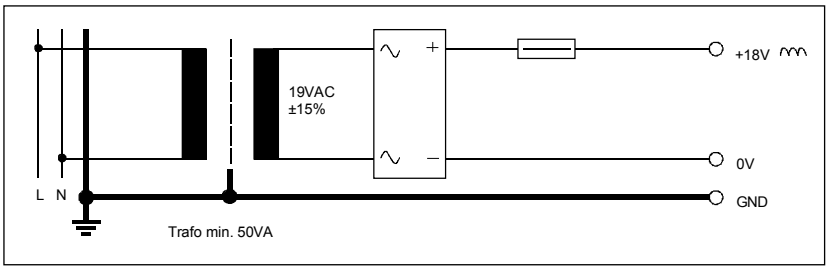

- Sensors: Electro-mechanical switches
- Actuators: Relays, lamps, small valves with < 0.5A switching current
- Suitable for Modules: PCD2.Mxxxx
  PCD2.E1xx, E5xx, E6xx, A2xx, A4xx, B1xx, G4xx
  PCD2.W1xx, W2xx, W3xx, W4xx, W5xx, W6xx

Small to medium installations

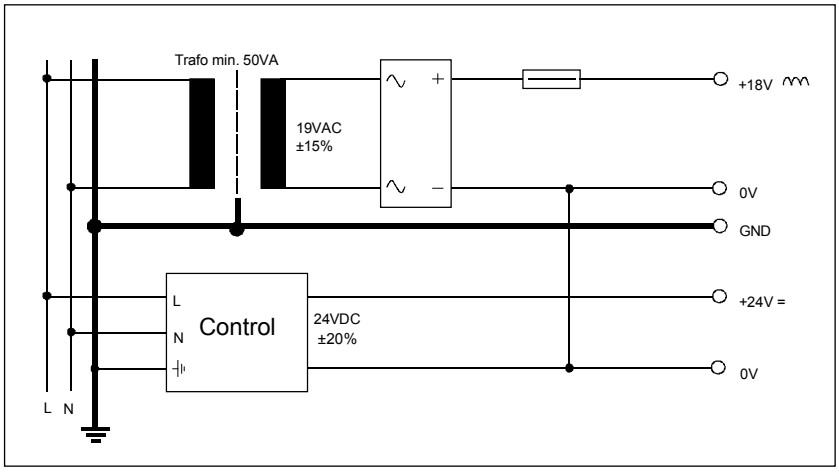

- Sensors: Electro-mechanical and proximity switches, photoelectric barriers
- Actuators: Relays, lamps, displays, small valves with < 0.5A switching current
- Suitable for Modules: PCD2.Mxxxx
  PCD2. E1xx, E5xx, E6xx, A2xx, A4xx, B1xx, G4xx
  PCD2.W1xx, W2xx, W3xx, W4xx, W5xx, W6xx
  PCD2. H1xx*), H2xx*), H3xx*)
  PCD7.D2xx*)

*) These modules must be connected to a smoothed 24 VDC supply

3.7.2 Internal power supply

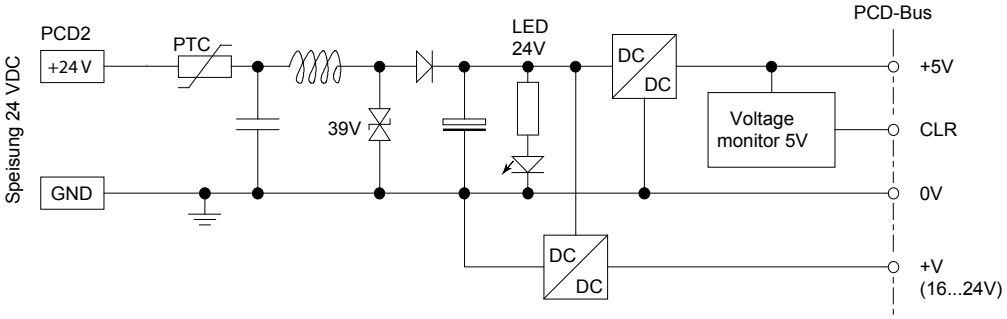

Capacity of internal power supply

From the base units, the following currents are available for the plug-in modules:

+5 V:	1,400 mA
+V (16...24V):	100 mA (the exact loads should be taken or calculated from the technical details in section 3.2, or you are advised to use the calculation table at www.sbc-support.ch).

3.7.3 Earthing concept

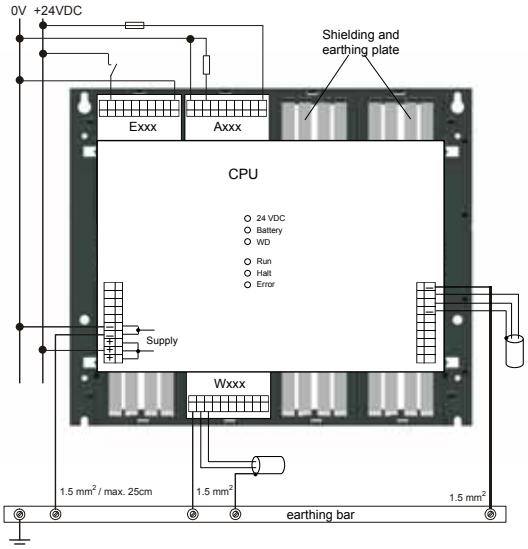

In the bottom part of the PCD2 module housing there is a shielding and earthing plate. Together with the shielding and earthing plate in the module holder, this constitutes the common, large-area ground for all I/O modules and for the external power supply.

When a module is plugged into the module holder, a metal tab on the module housing creates a reliable multi-point contact to the module carrier concerned.

The zero-potential (Minus pole) of the 24 V supply is connected to the Minus terminal of the supply. This should be connected to the earthing bar with the shortest possible wire (< 25 cm) of 1.5 mm^2.

Any shielding of analogue signals or communication cables should also be brought to the same earth potential, either via a Minus terminal or via the earthing bar. All Minus connections are linked internally. For problem-free operation, these connections should be reinforced externally with short wires of 1.5 mm^2.

3.7.4 Cable layout

Wiring to the I/O modules can be laid in the cable channels on both sides.

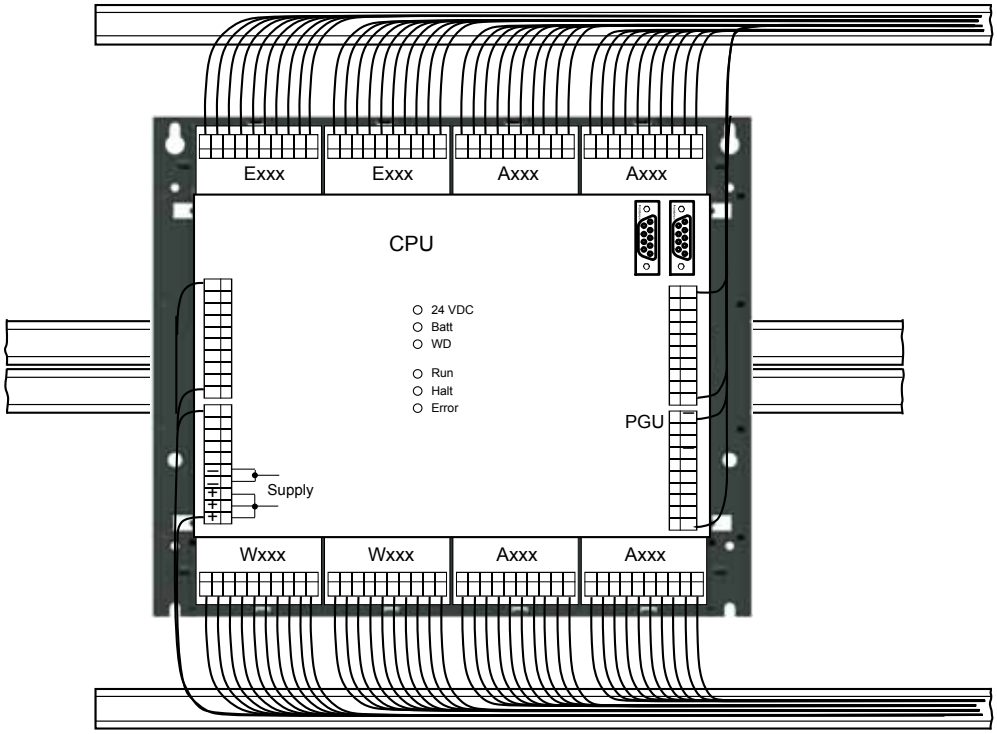

The cables to the terminals on the motherboard are run through the two side channels from the bottom or from the top.

The terminals are accessible on the motherboard without removing the cover.

Following these rules will ensure that the LEDs are visible and the bus connections remain accessible.

3.8 Operating states

The CPU can assume the following operating states:

Run, Run conditional, Run with error, Run cond. with error, Stop, Stop with error, Halt and System Diagnostics. The display uses the LEDs shown below:

CPU type	**PCD2.M5_**						
LED	**Batt**	**WD**	**Run**	**Halt**	**Error**		
Colour	Red	Yellow	Green	Red	Yellow		
Run	○		●	○	○		○ LED off ● LED on ●/○ LED flashing
Run cond.	○		●/○	○	○		
Run with error	○		●	○	●		
Run cond. with error	○		●/○	○	●		
Stop	○		○	○	○		
Stop with error	○		○	○	●		
Halt	○		○	●	○		
System diagnostics	○		●/○	●/○	●/○		
Battery voltage	●		○	○	●		

Start	Self-diagnosis for approx. 1sec after switching on or after a Restart
Run	Normal processing of the user program after Start. Where a programming unit is connected via a PCD8.K11x in PGU mode (e.g. PG5 in PGU mode), the CPU automatically goes into the Stop state and not the Run state; this is for safety reasons
Run conditional	Conditional Run state. A condition has been set in the debugger (Run until...), which has not yet been met
Run with error	Same as Run, but with an error message
Run cond. with error	Same as conditional Run, but with an error message
Stop	The Stop state occurs in the following cases: • Programming unit in PGU mode connected when the CPU was switched on • PGU stopped by programming unit • Condition for a COND.RUN has been met
Stop with error	Same as Stop, but with an error message
Halt	The Halt state occurs in the following cases: • Halt instruction processed • Serious error in user program • Hardware fault • No program loaded • no communication module on an S-Bus PGU or Gateway Master port
System diagnostics	
Reset	The RESET state has the following causes: • Supply voltage too low • Firmware not starting up

3.9 Connections to PCD2.M5_

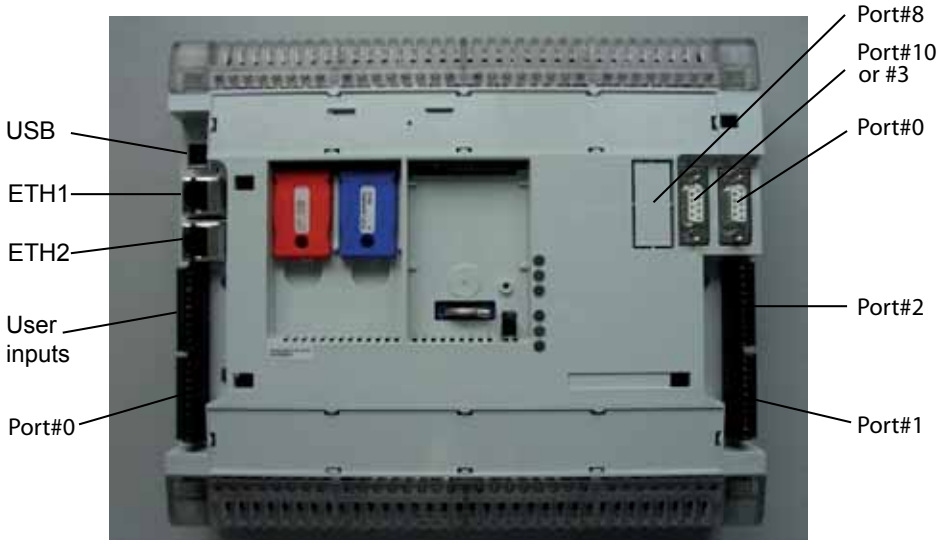

		D-Sub pin	RS232/ PGU/Port#0 signal	S-Net/MPI/RS485 Port#10 or #3 signal			Explanation
		1	DCD	PGND			GND
		2	RXD	GND			0 V of 24 V supply
		3	TXD	RxD/TxD-P[1])	/D	B (red)	Receive/transmit data positive
		4	DTR	RTS/CNTR-P			Control signal for repeater (direction control)
		5	GND	SGND[1])			Date communication potential (earth to 5 V)
		6	DSR	+5V [2])			Supply voltage to P line termination resistors
		7	RTS	MPI24V			Output voltage plus 24 V
		8	CTS	RxD/TxD-P[1])	D	A (green)	Receive/send data negative
Port#10/3	Port#0	9	n.c.	n.c.			not used

[1]) Mandatory signals (must be provided by the user).
[2]) The signal is provided by the control system. Specially the both signals SGND and +5V are provided by the PCD, if the Profibus configuration is correct.

Port#10: Pins 3, 4, 5, 6 and 8 are insulated from the system. Pin 2 serves as a backlink for Pin 7.
Port#0: This can be used as an alternative only, either the 10-pole terminal block or the 9-pole D-Sub socket.

Terminal block for power supply, watchdog, Port#0, PGU

Pin	signal			Explanation
29	RxD/ TxD-N	D	A (green)	Port#0 also as PGU; RS485 up to 115.2kBd; usable as free user interface
28	RxD/ TxD-P	/D	B (red)	
27	-			
26	WD			Watchdog
25	WD			
24	-			Voltage supply
23	-			
22	+			
21	+			
20	+			

RS485 terminator switch

Switch position	Designation	Explanation
up	O	without termination resistors
down	C	with termination resistors

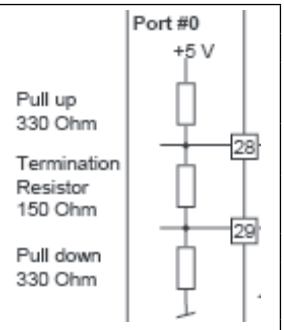

Ethernet (PCD2.M5540 only)

For these Ethernet connections, a new 10/100 Mbits switch is used, which switches automatically between the two speeds. Both sockets can be used independently of each other.

The RJ45 shield is AC-coupled and so fully insulated. **ETH1** and **ETH2** are independently AC-coupled.

Sockets:
2 x RJ45 positioned vertically, metal housing, 2 LEDs

orange:	Link and activity
green:	Speed 10 or 100 Mbits

USB programming port

USB 1.1 slave device

3.10 Partitioning options for user memory

In the PG5 hardware configuration, the user memory is partitioned by default into lines of code and texts/DBs, in a way that suits most applications.

In the case of a large program with few texts/DBs or a very small program with many texts/DBs, the user can partition the memory manually. In order to choose an appropriate breakdown, the following should be noted:

- The partitioning is into "kBytes lines of code" and "kBytes text/DBs", where the "kBytes lines of code" can only be changed in 4 kByte steps, as every line of code occupies 4 bytes
- The result of the formula (4 x "kBytes program cells") + "kBytes texts/DBs" must equal the effectively available user memory,
  e.g. 4 x 24 kBytes + 32 Kbytes = 128 Kbytes
- Each character of a text occupies 1 byte
- Each 32-bit element of a DB occupies eight bytes in the address range 0..3999, and the header of the DB takes up a further three bytes
- We recommend always using DBs with addresses ≥ 4000. These can hold more elements (16384 instead of 384), take up less space (only 4 bytes instead of 8 bytes per element, but NB, 8 bytes instead of 3 for the header) and the access time is substantially shorter.

Example of manual partitioning:

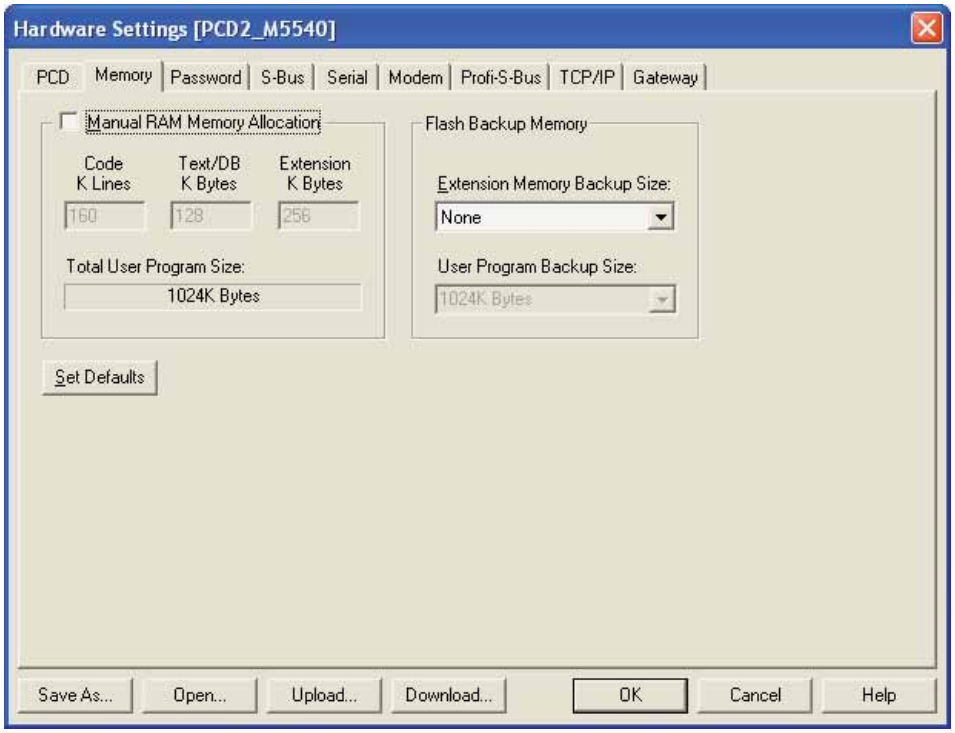

3.11 Data storage in case of power failure

The resources (registers, flags, timers, counters etc), and possibly the user program and the text strings/DBs, are stored in RAM. To ensure that they are not lost and that the hardware clock (where present) continues to run when there is a power failure, the PCD2s are equipped with a buffer capacitor (SuperCap) or a buffer battery:

CPU type	Buffer	Buffer time
PCD2.M5_	Renata CR 2032 lithium battery	1...3 years[1)]

[1)] Depending on the ambient temperature; the higher the temperature, the shorter the buffer time

With new controllers, the batteries are packaged with the units, and have to be inserted on commissioning. Observe the polarity of the batteries:

- Insert Renata CR 2032 coin cells in such a way that the Plus pole points in the direction of the embossed plus sign on the housing

Battery changing

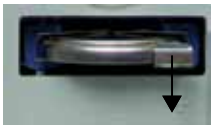

- Remove PCD cover
- Pull locking clip in the direction of the embossed plus sign on the housing (see arrow)
- Remove old battery
- Insert new Renata CR2032 battery in such a way that the Plus pole is in contact with the locking clip

CPUs with lithium batteries are not maintenance-free. The battery voltage is monitored by the CPU. The BATT LED lights up and XOB 2 is called (if XOB 2 is not programmed, the ERROR LED will also light up after 1 second of battery failure), where

- the battery voltage is less than 2.4 V
- the battery is flat or shows an interrupt
- the battery is missing

We recommend changing the batteries with the PCD attached to the power supply, to avoid any loss of data.

3.12 Memory space on the PCD

3.12.1 General

The PCD controllers are fitted with a user program memory and a matching user backup memory as standard. On the PCD, both types are referred to as user memory.

User Program Memory (RAM)

The user program memory consists of a RAM (Random Access Memory) and contains the program code and a text and DB memory area. It also contains the extension memory, which also holds DBs and texts (addresses ≥ 4000). On a PCD2.M5_, all DBs and texts are always in RAM. The main difference between the texts and DBs in the text/DB memory segment and those in extension memory is the greater maximum size of DBs and texts.

To run an application on the PCD, it is sufficient to load only the user program memory. As this is a RAM, the program and the contents of the texts and DBs (and the other media, registers, flags etc.) may be lost if there is no power and the battery is flat or not connected.

Backup memory (Flash)

In order to prevent the loss of the program, every PCD CPU has onboard flash memory fitted as standard to back up the user program memory.

It is also possible to save DBs on this flash during runtime. This allows key values of registers and flags to be saved to the flash at runtime and reloaded later.

Along with the installed onboard flash memory, a flash card can also be used for the user backup program, e.g. PCD7.R500. The use of this card allows the user program and the configuration to be transferred from one controller to another.

Even with backup to the flash card, the source files for the project must be retained, as the application is only stored in the PCD as machine code.

If it transpires when the PCD is started up that the RAM memory has been corrupted (e.g. after a power failure with a flat or missing battery), the application is automatically reloaded from the flash backup memory. The LIST command "Test" and operand "400" can be used to test this.

All hardware settings are also saved to the flash backup memory (onboard or on an equivalent flash card).

Partition of user backup memory

The user backup memory is split into two parts. The first is available for the user program backup and is always present. In the PG5 hardware configurator, this memory is referred to accordingly as "user program backup".

The second, optionally configurable part is referred to in PG5 as "extension memory backup" (data backup) and can be used to back up DBs and texts to the flash during runtime.

If part of the backup memory is used as "extension memory backup", the available "user backup memory" is reduced by twice the amount of "extension memory backup" used. In parallel with the reduction of the "user program memory backup", the user program memory is also adjusted, so the total user program memory can be copied to the backup flash.

Available user backup memory

System	RAM user program memory	Flash user backup (prg + data)	Default memory configuration
5440 **5540**	1024 Kb	1024 Kb	48k prg lines, 64k txt, 256k ext.

Note that in the default memory configuration, each program line requires 4 bytes.

Any flash memory module suitable for user program backup (e.g. a PCD7.R500) can be used as a flash card. Where multiple compatible modules are connected, the first module from the left will be used (Slot M1, M2).

Flash memory modules (optional)

For the PCD, there are various flash memory modules for different applications. Some of these modules are explicitly designed for a particular use (e.g. the PCD7. R500 for user program backup). However, there are other modules available for various types of storage (e.g. the PCD7.R551M04, which contains 1 MB of memory space for the user program backup and 3 MB the file system).

Most flash memory modules are simple cards (PCD7.Rxxx), which can be plugged into a PCD2.M5xxx0 in Slot M1 or M2.

Flash memory modules for the file system

Apart from the flash memories mentioned above for backing up the user program memory and DBs, there is another type of flash memory available for files. These memory modules can be used to save "PC-readable" files such as web pages, images or log files. The content of these flash memory modules can be accessed via the web server, the FTP server (for PCD2 with Ethernet interface only) and the user program.

Memory module summary for PCD2.M5xx0 CPUs

Module	Description	for PCD2 system	User backup	File system	Socket
PCD7.R500 	Flash memory modules as backup for the user program.	M5xx0	1 MB		M1 / M2
PCD7.R550M04 	Flash memory modules with file system. To save files e.g. for the web server. The files can be accessed by the PCD via FTP or HTTP direct servers. The PCD can also write PC-readable files (*.csv) directly to the module.	M5xx0		4 MB	M1 / M2
PCD7.R551M04 	Flash memory modules with file system and as backup for the user program. The files can be accessed by the PCD via FTP or web servers. The PCD can also write PC-readable files (*.csv) directly to the module.	M5xx0	1 MB	3 MB	M1 / M2
PCD7.R-SD256 **PCD7.R-SD512** 	Saia® SD flash memory card with 256 or 512 MB file system. This card can be read with a card reader and the appropriate software (Saia®File System Explorer) installed on a PC.				

Sockets for memory modules

The slots shown below are intended to take memory cards.

3.12.2 Program backup and restore on backup flash

The user program memory (user program, text/DB memory and extension memory), including the hardware settings, can be copied from a PCD either to the onboard flash or to an appropriate memory module. The procedure for backup/restore to/from a flash card is identical to that for backup/restore using the onboard flash.

If a flash card is plugged into the PCD and a backup is run, this module is automatically written to and the backup is also created on the onboard flash (provided sufficient memory space is available).

With a restore with a memory module plugged in, the content of the flash module is restored and then (where possible) copied to the onboard flash.

Where multiple flash modules suitable for backing up the user program memory are installed on the PCD, the first from the left will be read/written to (sequence: M1, M2).

In order to copy to the backup flash, the control must be in a STOP state. Where necessary, a reminder message will appear. The copying process may take up to 30 seconds. During the "Copy Program to Flash..." operation, the Run/Halt LED on the PCD flashes alternately red and green, and the Run and Halt LEDs also flash alternately.

Program backup to backup flash

The user program memory can be loaded into flash using PG5. The relevant function can be found on the "Online" menu within the PG5 project manager or the online configurator.

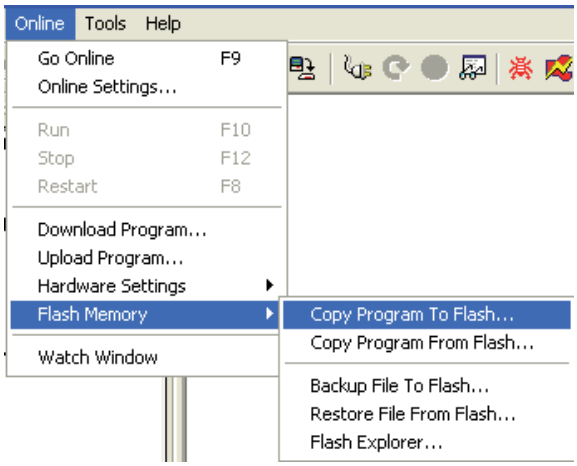

Program restore from backup flash

- ***Automatic restore***
  If no valid user program is loaded when the CPU is switched on, the CPU operating system checks whether there is a valid program in the onboard flash; if so, it is automatically loaded and executed.
  An automatic restore is also executed if a flat battery, or none at all, is detected on a PCD2.M5xx0.

- ***Manual restore with PG5***
  PG5 can be used to write a valid program including configuration to the CPU from the onboard flash. This function can be found on the "Online" menu within the PG5 project manager or the online configurator:

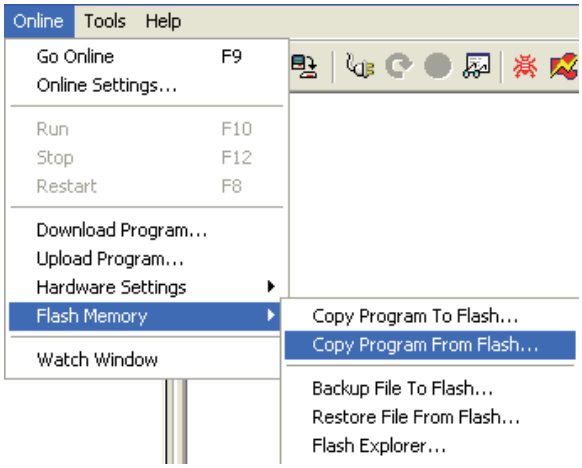

- ***Manual restore without PG5***
  If the "run/halt" switch is pressed for more than 3 seconds (while the PCD is in a "Run" state), the user program will be loaded from the onboard flash.

  During the "Copy Program from Flash..." operation, the Run/Halt LED on the PCD flashes alternately red and green, and the Run and Halt LEDs also flash alternately.

3.12.3 Transferring an application with flash card

With the flash card, it is possible to transfer an application from a PCD2.M5_ to another controller of the same type:

- On the source controller, copy the application to the flash card as described in the preceding sections
- Remove the supply to the source controller, and unplug the flash card
- Send off the flash card where applicable
- Insert the flash card into the target controller (which should be switched off)
- Switch on controller.
- Press "Run/Halt" switch for more than 3 seconds; the LEDs will flash while the program is being copied from the flash card (control switches to "Halt" state)
- Restart the control with the "Run/Halt" switch

If the configuration does not match the options available on the controller (e.g. IP configuration on a controller without IP), the controller will switch to "Halt" state and an entry will be written to history.
Loading the user program from the flash card will overwrite the user program backup on the onboard flash, provided there is sufficient space for the program on the backup flash.

3.12.4 Backup program after download option

In PG5, there is an option which copies the whole user program (HW configuration, code, Text/DB and extension memory) to flash after the program download. This can be found on the "Download Program..." screen:

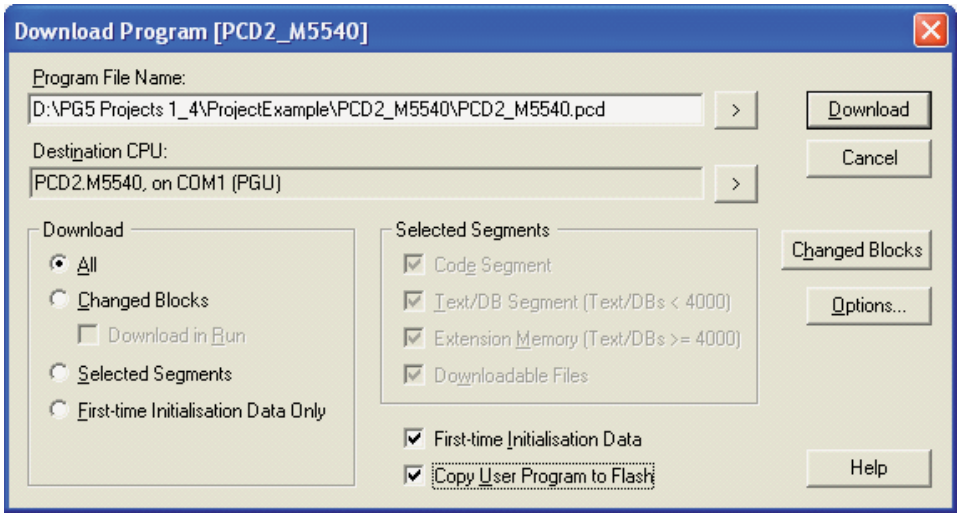

It is also possible to activate this option by default. To do this, the corresponding option should be enabled in the PG5 project manager in the "Tools" menu → "Options…":

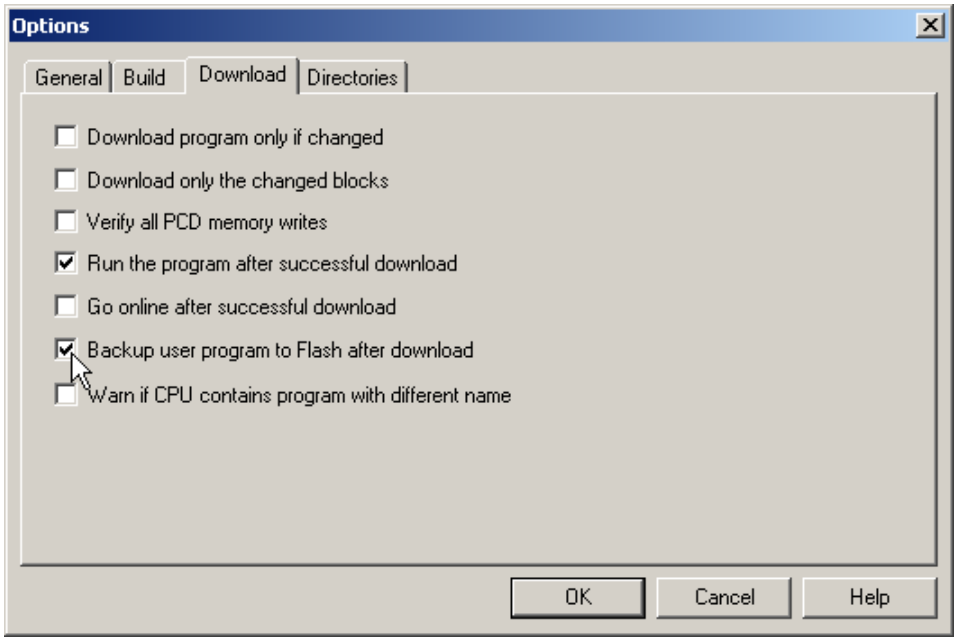

3.12.5 Backup/restore of RAM texts/DBs at run-time

As described above, the application can be copied to the flash card after downloading. In order to store process data gathered during operation, there is a facility to copy texts or DBs from extension memory (address ≥ 4000) to the flash card, or conversely, to copy the last state written to the flash card back in the text/DB in extension memory.

The memory space required to back up the DBs (extension memory backup) must be configured in the "Memory" tab in hardware settings.

Memory tab

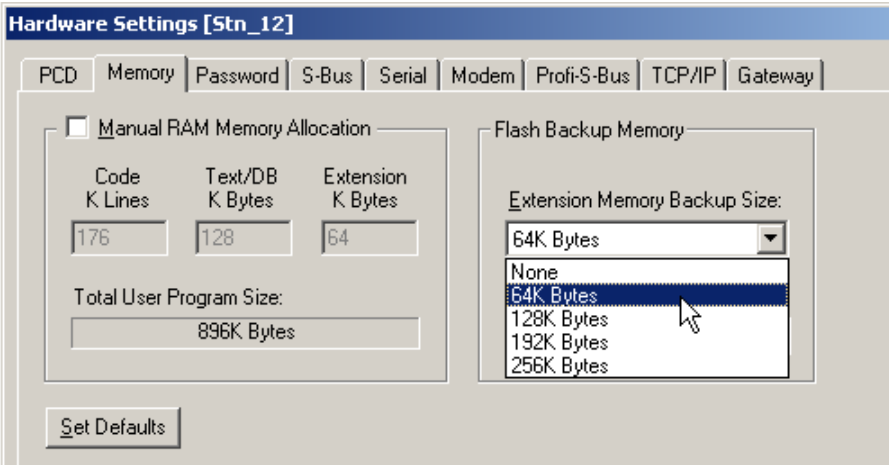

On the Memory tab, the Extension Memory Backup Size can be set. This memory size represents the memory space for the "Copy program to flash" function. On the left-hand side, the currently available memory space for the user program is displayed.

If the "extension memory backup size" is increased, the "user program backup size" will be automatically reduced (by twice the configured "extension memory backup size")

For storing texts/DBs on the flash card, restoring, deleting and running diagnostics, there are four SYSRD/SYSWR instructions provided, as described in detail below; these can be invoked **at a suitable place** in the user program. These instructions must be used with great care, to prevent any damage to the unit or the flash card.

Storing a text/DB on the flash card with SYSWR K 3000
Storing a text/DB on the onboard flash with SYSWR K 3100

Instruction:	**SYSWR**	**K 3x00**[1)]	
		K number	; address of the texts/DBs as ; K constant or in a register, ; existing text/DB ; addresses in the range >= 4000 ; may be used
	1) Alternatively, the value 3x00 can be passed in a register.		

Battery status after execution:		
	low:	the text/DB has been saved, and the flash card is ready for new SYSWR instructions
	high:	the last instruction was not processed to completion; before further SYSWR K 3x0x instructions, a SYSRD K 3x0x must be executed to check the readiness of the flash card

When using the instruction SYSWR K 3x00, note the following:

- After any change of memory configuration, a "backup user program to flash" must be run, to ensure that the "backup DB to flash" will work (partitioning the flash).
- The flash card can be written to a maximum of 100,000 times, so it is not permissible to invoke the instruction in a cyclical manner or at short intervals.
- It is strongly recommended to execute a SYSRD K 3x00 before this instruction, to test whether the flash card is available and ready.
- The processing time for the instruction may be up to 100 ms. At that point, there is no guarantee that all of the text/DB has been written (the process will continue in background). For this reason, the instruction must not be invoked in XOB 0 (XOB for a power failure) or during time-critical processes.
- If errors occur during processing, XOB 13 will be called where it is present, or the error LED will be set
- When starting the PCD after a loss of RAM memory, the state of the texts/DBs **after the last download** is restored, even where the SYSWR K 3x00 instruction has been used to store newer versions.
- Within the maximum number of write cycles, a text/DB can be stored any number of times, without the flash card becoming over-full.

Restoring a text/DB from the flash card with SYSWR K 3001
Restoring a text/DB from the onboard flash with SYSWR K 3101

Instruction:	**SYSWR**	**K 3x01**[1)]	
		K number	; address of the texts/DBs as ; K constant or in a ; register, existing text/DB ; addresses in the range >= 4000 mAy be used
	1) Alternatively, the value 3x01 can be passed in a register.		
Battery status after execution:			
	low:	the text/DB has been restored and the process is complete, so further SYSWR K 3x0x instructions can be executed immediately	
	high:	the last instruction was not processed to completion; before further SYSWR K 300x instructions, a SYSRD K 3x00 must be executed to check the readiness of the flash card	

When using the instruction SYSWR K 3x01, note the following:

- It is strongly recommended to execute a SYSRD K 3x00 before this instruction, to test whether the flash card is available and ready.
- If errors occur during processing, e.g. because no flash card is plugged in, XOB 13 will be called where it is present, or the error LED will be set

Deleting stored texts/DBs from the flash card with SYSWR K 3002
Deleting stored texts/DBs from the onboard flash with SYSWR K 3102

Instruction:	**SYSWR**	**K 3x02**[1)]	
		K 0	; Dummy parameter, required to ; maintain the structure of the SYSWR ; instruction
	1) Alternatively, the value 3x02 can be passed in a register.		
Battery status after execution:			
	low:	the text/DB has been deleted and the process is complete, so further SYSWR K 3x0x instructions can be executed immediately	
	high:	the last instruction was not processed to completion; before further SYSWR K 3x0x instructions, a SYSRD K 3x00 must be executed to check the readiness of the flash card	

When using the instruction SYSWR K 3x02, note the following:

- The deletion only affects text/DBs previously stored with SYSWR K 3x00. The contents of the extension memory stored after a download are retained
- It is strongly recommended to execute a SYSRD K 3x00 before this instruction, to test whether the flash card is available and ready.
- The processing time for the instruction may be several 100 ms. For this reason, it must not be invoked in XOB 0 (XOB for a power failure) or during time-critical processes.
- If errors occur during processing, e.g. because no flash card is plugged in, XOB 13 will be called where it is present, or the error LED will be set

Diagnostics of flash card with SYSRD K 3000
Diagnostics of onboard flash with SYSRD K 3100

Instruction:	**SYSRD**	**K 3x00**[1)]	
		R_Diag	; Diagnostics register
	1) Alternatively, the value 3x00 can be passed in a register.		
Battery status after execution (only where memory space available for "backup DB to flash" function):			
	low:	The flash card is ready, and SYSWR 3x0x instructions can be executed	
	high:	The Flash card is not available or not ready; the diagnostic register must be retrieved and the process retried later	

When using the instruction SYSRD K 3x00, note the following:

- The battery is only set as described above where there is memory space available for the "backup DB to flash" function (i.e is correctly configured). For this reason, the diagnostics register should also be checked. A decimal value of 0 means that the flash can be used.

Specification of diagnostic register		
Bit-no.	**Description**	**Cause, where bit high**
0 (LSB)	No backup possible	
1	Header not configured	No application on the flash card
2	No SYSWR access to flash card	The corresponding option has not been activated in the hardware configuration (reserved for text/DB etc.)
3	DB/text not present	In the last instruction, an incorrect DB/text number was used as a parameter
4	DB/text format invalid	The length of the DB or the text has been changed
5	Restored	Text/DB on the flash card has been restored, as an error occurred
6	Memory full	Too many texts/DBs, no more free memory space available
7	Already in progress	The last SYSWR 3x0x instruction was not yet completed when the next was started
8...31	Spare	

3.13 Memory module PCD2.R6000 for flash cards (FCs)

3.13.1 System overview

The PCD2.R6000 is an I/O module for industrial Secure Digital (SD) flash card applications, for which it can be inserted into I/O slots 0...3 on a PCD2.Mxxxx. The SD cards can be removed with the power on.

The SD cards can be accessed in 3 different ways:

- Via Ethernet TCP/IP with FTP server
- With a browser via PCD web server
- With the PCD program, using a file system library

3.13.2 Technical data

PCD2.R6000 module	
Power consumption without SD flash card	15 mA
Max. power consumption incl. SD flash card	100 mA
Display	5 LEDs
Operating mode setting	BCD switch
Card holder and detection switch	With label clip
Required properties of SD flashcard (as tested by Saia)	
Capacity supported	128, 256, 512 MB, 1 GB
Technology	Single-level cell
Service life	600,000 or more programming/deletion cycles
Data retention	5 years or more
Operating temperature	-25°C...+85°C or better
MTBF	1,000,000 hours or better

3.13.3 Operation

The PCD2.R6000 can only be inserted into I/O slot 0...3 (0, 16, 32, 48) on a PCD2. Mxxxx. The firmware detects these modules at start-up and installs the necessary drivers. Do not insert or remove the modules with the power on.
Up to 4 PCD2.R6000 units can be used in a PCD2 system.

Insertion of I/O modules

The I/O modules are inserted from the side, pushed towards the middle of the unit until they reach the end stop and snap into the retaining catch.

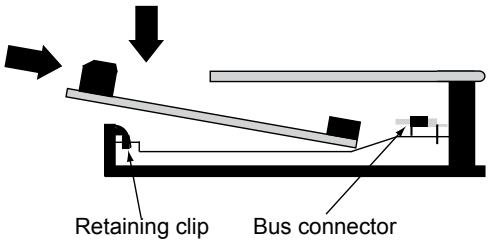

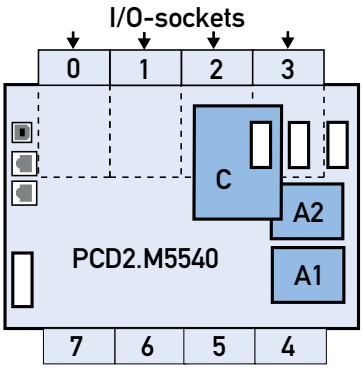

Data access

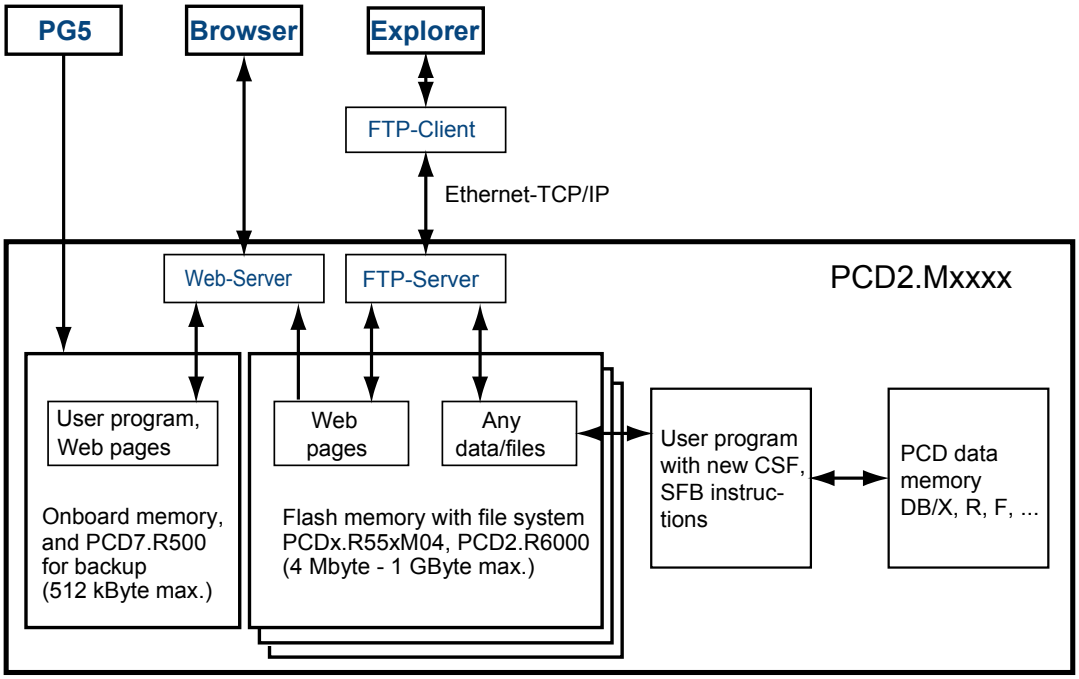

FTP server and file system access can only be achieved with the plug-in flash memory module. Access via FTP server is only possible via the Ethernet TCP/IP interface.

Based on the predefined requirements, Saia uses its own file system. The Saia file system is embedded in a FAT (PC compatible file system) framework, to make the restricted processes when used in a commercial SD card reader/writer visible with standard PC tools. The Saia file system is called SAIANTFS.FFS.

Individual files within SAIANTFS.FFS can be accessed with a software tool for PCs provided by Saia.

As 10% of the SD card capacity is reserved for the FAT, this extraction PC tool can be copied there. This allows data stored in the Saia file system to be accessed quickly on any PC with a standard SD card reader. The Saia PC tool can also make copies of SAIANTFS.FFS on any drive. Any remaining FAT storage space can be used to save documentation or for other purposes.

The PCD2.R6000 can be used for PCD2 program backup in the same way as the PCD7.R500. The PCD2 program backup is written to the file backup.sei in a specified area and identified as a hidden read-only file in the FAT.

Apart from the SAIANTFS.FFS and backup.sei files, files in the FAT area cannot be accessed when the SD card is inserted into the PCD2. During formatting, a file is written to the FAT area containing the properties of the SD card. Data access is faster with a commercial SD card reader/writer than with a PCD2.

3.13.4 Displays and switches

The memory module is fitted with 3 LEDs:

LED	Meaning
Diag	Flashes when there is an error message
Busy	Do not remove module when this LED is on.
Act	Works as with a hard disk drive; flashes when data being processed

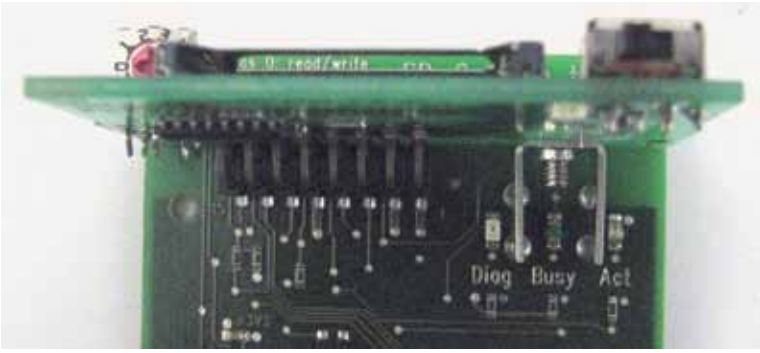

Setting of operating modes with the BCD switch:

On the module is a 10-position BCD switch which can be set with a #0 screwdriver.

BCD position	Meaning
0	***normal read/write***
1	Spare
2	Spare
3	Spare
4	Spare
5	***format*/***
6	Spare
7	Spare
8	Spare
9	***normal read only***

* Starts after insertion; remove, then plug in again

** If the card itself is not write-protected (switch or software)

- There must be a PC FAT file system (FAT16) on the card in order for the SD card to be formatted with the Saia file system
- First, all FAT files are deleted, then the Saia file system is installed when the card is inserted and the BCD switch set to 5
- If the BCD switch is set to 0, the Saia file system (SAIANTFS.FFS) is installed if it is not already present and the card is empty, i.e. if a new card is installed, it does not have to be formatted with position 5.
- Not all flash cards have a "write-protect" switch
- The card is inserted into a so-called push-push socket (push to insert and remove)
- Do not remove card when the "Busy" LED is on.

3.13.5 Flash card

The SD flash card is not part of the PCD2.R6000 and has to be ordered separately.

The SD card must be of good quality (industry-standard, as tested by Saia). Other flash cards can also be used, but they will not be supported and are excluded from any warranty.

To increase service life, the flash cards should not be more than 80% filled for pure read applications. For read/write applications, no more than 50% of the memory space should be used.

On the PCD2, a non-standard file system (Saia FS) is used. This means that the flash cards have to be formatted before being used for the first time. This happens automatically when a new FAT 16 flash card is inserted into the PCD2.R6000.

Flash card handling

The card is inserted into a so-called push-push socket (push to insert and remove). It can be removed without switching off the PCD2.

Inserting the flash card

Move slider①on the PCD2.R6000 to the OFF position

When inserting the flash card, press until you feel some resistance; you may hear a soft click. Ease off the pressure until the card is at the same height as the slot.

Move slider①on the PCD2.R6000 to the ON position

The SD card is formatted with the Saia file system (regardless of the setting of the BCD switch②)

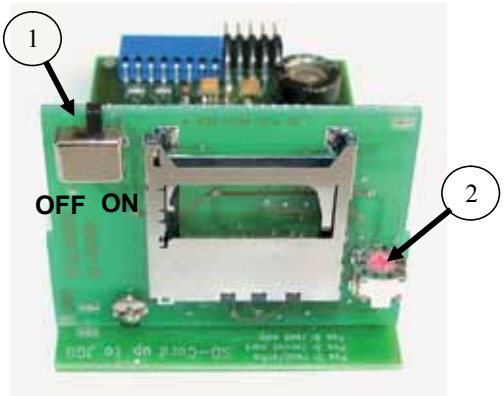

Removing the flash card

Move slider①on the PCD2.R6000 to the OFF position

Wait until the "Busy" LED is off. If the "Busy" LED is off, push the card into the module housing until you feel some resistance. Ease off the pressure until the card slides out.

Reformatting the flash card

Move slider①on the PCD2.R6000 to the OFF position

Wait until the "Busy" LED is off.

Turn BCD switch②to position 5

Move slider①on the PCD2.R6000 to the ON position

Wait until the "Busy" LED is off.

Remove and re-insert SD card

NB: This procedure deletes all stored data.

3.13.6 User program backup to the flash card

It is possible to back up the user program (see section 3.12.1) to the flash card in the PCD2.R6000.

The memory locations for the user program (to back up and restore) are queried in the following order:

1. M1 Slot
2. M2 Slot
3. I/O Slot 0...3
4. Onboard flash memory (where present)

I/O bus functions

Some states are detected by the user program.

I/O bus offset	Write	Read	Meaning
+0		BCD switch setting Bit 0 (lsb)	Position (non-inverted) of BCD switch
+1	do not use	BCD switch setting Bit 1	
+2	do not use	BCD switch setting Bit 2	
+3	do not use	BCD switch setting Bit 3 (msb)	
+4	do not use		
+5	do not use		
+6	do not use	0 = Card present	1 = card removed
+7	do not use	SD write-protect switch	1 = SD blocked/removed 0 = MMC or SD released

3.13.7 Order details

Order code	Description	Weight
PCD2.R6000	Base module for SD flash memory cards, for I/O slot 0…3 (flash card not included)	60 g
PCD7.R-SD256	SD flash memory card 256 MB	2 g
PCD7.R-SD512	SD flash memory card 512 MB	2 g
PCD7.R-SD1024	SD flash memory card 1,024 MB	2 g

3.14 Hardware clock (Real Time Clock)

The PCD2.M5_ CPUs are fitted with a hardware clock on the motherboard:

The presence of a hardware clock is an absolute requirement where the HeaVAC library clock timers are used.

3.15 Hardware watchdog

PCD2.M5_ CPUs are fitted with a hardware watchdog as standard. A relay at I/O address 255 can be triggered; this remains activated as long as the status of O 255 changes periodically at least every 200 ms. Within PG5, FBoxes are provided for this purpose.

If for any reason the program component with the watchdog FBox is no longer being processed at sufficiently short intervals, the watchdog relay will drop out and the amber watchdog LED will go out. Please read the online help for these FBoxes for more details.

The same function can also be implemented with IL (AWL) instructions. This variant works **independently of the cycle time** of the user program.

Example:

```
COB   0            ; or 1…15
      0
STL   WD_Flag      ;Invert help ·ag
OUT   WD_Flag
OUT   O 255        ;Set output 255 to ·ashing
      :      :
      :      :
ECOB
```

With the code shown in the example, the watchdog also drops out in the case of loops caused by the programmer. With regard to the cycle time of the user program, please note:

- With cycle times over 200 ms, the code sequence must be repeated several times in the user program, to prevent the watchdog dropping out in normal operation.

As address 255 is in the normal I/O range, there are restrictions on the permissible I/O modules in certain sockets:

CPU type	Restrictions
PCD2.M5_	1) No analogue, counter and motion control modules on the socket with base address 240 (apart from PCD3.W3x5 and PCD3.W6x5, which are not affected by the watchdog) 2) output 255 cannot be used for digital I/O modules

Watchdog - connection diagram

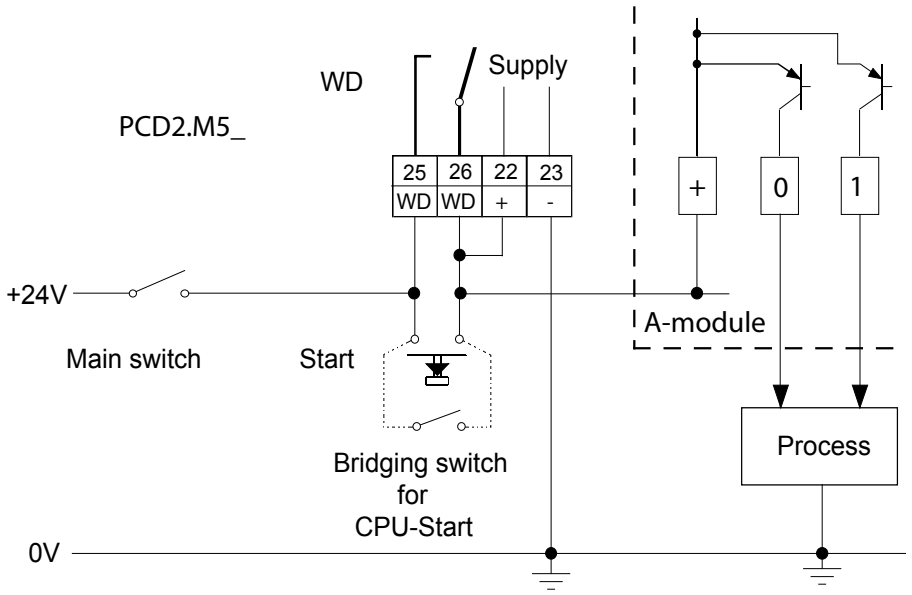

[1)] Switching capacity of the watchdog contact: 1 A, 48 VAC/DC

The status of the watchdog relay can be read via I 8107
“1” = Watchdog relay on.

3.16 Software watchdog

The hardware watchdog provides maximum security. However, for non-critical applications, a software watchdog may be sufficient, whereby the processor monitors itself and the CPU is restarted in the event of a malfunction or a loop.

The core of the software watchdog is the instruction SYSWR K 1000. When this is first issued, the software watchdog function is activated. This instruction must then be issued at least every 200 ms, or the watchdog will trigger and restart the controller.

Instruction:	**SYSWR**	**K 1000**	; Software watchdog instruction
		R/K x	; Parameters as per table below ; K constant or value in ; register
	x = 0	The software watchdog is deactivated	
	x = 1	The software watchdog is activated; if the instruction is not repeated within 200 ms, there will be a cold start	
	x = 2	The software watchdog is activated; if the instruction is not repeated within 200 ms, XOB 0 will be called and then there will be a cold start XOB 0 calls are entered in the PCD history as follows:	
		"XOB 0 WDOG START"	where XOB 0 has been invoked by the software watchdog
		"XOB 0 START EXEC"	where XOB 0 has been invoked because of a supply fault

3.17 User inputs and outputs

3.17.1 Basics

Because of the input filters and the effect of the cycle time, the digital input modules are not suitable for immediate reaction to events or for rapid counting processes.
When a positive edge is detected at the user input, an associated XOB is called (e.g. XOB 20). The code in this XOB defines how the unit should react to the event. The code in the XOB called from the user input must be kept as brief as possible to allow enough time between the interrupts to process the rest of the user program.
Many FBoxes are intended for cyclic invocation and so not suitable for use in XOBs, or only in a limited way.
Exception: the FBoxes in the Graftec family (standard library) are well suited

3.17.2 PCD2.M5_ 24 VDC interrupt inputs

The interrupt inputs (also called user inputs) are located on the motherboard and can be connected via a 10-pole, plug-in terminal block (X6 - terminals 30 to 39). Source operation is always used.

Pin	Inputs	XOB called in case of a positive edge	Direct input query	Outputs	Direct output query
39	IX0	XOB 20	I 8100		
38	IX1	XOB 21	I 8101		
37	IX2	XOB 22	I 8102		
36	IX3	XOB 23	I 8103		
35	IX4*				
34	IX5*				
33				out0	O 8104
32				out1	O 8105

Operation:

When there is a positive edge at input **IX0**, **XOB 20** is called. The response time until XOB 20 is called is a maximum of 1 ms (input frequency max. 1 kHz where pulse/pause each 50 %, total of 4 frequencies max. 1 kHz). Regardless of whether the XOB is programmed, input 8100 is set (the same applies to IXn; see table above).

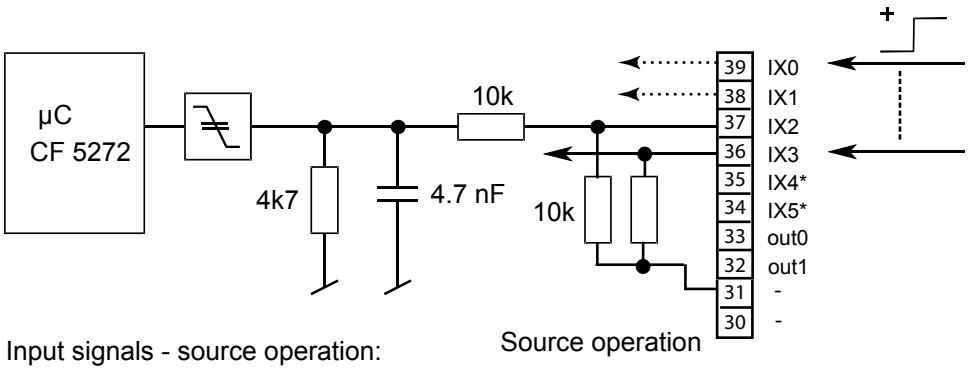

Input signals - source operation:
H = +15...+30 V
L = -30...+ 5 V or disconnected

Source operation

* Other funktions with later FW-versions

3.17.3 PCD2.M5_ user outputs

Outputs 8104 and 8105 can be used as standard outputs (8 Bit PWM output functionality not yet available). The outputs are designed for push/pull operation and run on +24 V supplied to X5. O 8106 set to “1” inverts the polarity of 8104 and 8105. The outputs can be loaded with up to 100mA (each output).

3.18 Operating mode switch (Run/Halt)

3.18.1 Run/halt push button

The operating mode can be changed while in use or at start-up:

At start-up:

- If the Run/Halt push button is pressed during start-up and then released again during one of the sequences described below, the following actions may be triggered:

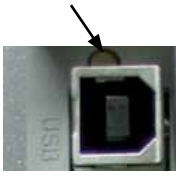

LED sequence	Action
Orange	none
Green, flashing (1 Hz)	Goes into "Boot" state and waits for f/w download
Red, flashing fast (4 Hz); from FW > V01.08.45	The system starts in the same way as with a flat Super CAP or missing battery, i.e. media (flash, registers etc.), user program and hardware settings are erased. The clock is set to 00:00:00 01.01.1990. The backup on the onboard flash is not deleted.
Red, flashing slowly (2 Hz)	The PLC does not start up and goes into "Stop" mode.
Red/green flashing (2 Hz)	Stored data deleted, i.e. media (flash, registers etc.), user program, hardware settings and the backup on the onboard flash are erased. However, where an external flash card is used, the program is not copied to the onboard flash.

In operation:

- If the button is pressed in run mode for more than ½ second and less than 3 seconds, the controller changes to halt mode and vice versa.
- If the push button is pressed for longer than 3 seconds, the last user program saved will be loaded from flash memory.

3.18.2 Run/halt switch

On the PCD2.M5_, it is also possible to influence the operating state with the switch accessible on the front of the unit under the blue cover.

If the controller is switched to halt mode, this will cause a change from run to halt; when it is switched to run, a cold start will be executed.

To release the switch, check the options in the PG5 hardware settings (see section 8.1.2).

3.19 E-display with PCD7.D3100E nano-browser

3.19.1 Technical data

Dimensions (mm)

Overall: 67 x 47 mm

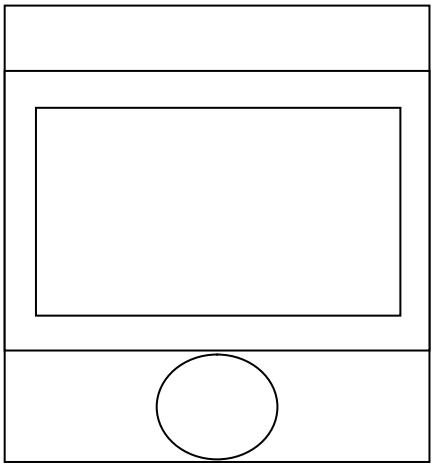

Electrical data

Current consumption: 50mA at +5V with backlighting
10mA at +5V without backlighting

Display details

4-stage grey dot matrix liquid crystal display

128 x 88 pixels with 0.25 x 0.25mm pixel size

Display size: 25 x 35 mm

3.19.2 Installing the display

The eDisplay is an electronic device, and must be handled according to ESD (electrostatic discharge) guidelines.

Remove cover of PCD2.M5_ housing (see section 3.5.2)
Remove the transparent protective film from the back of the cover

Cleaning advice

Do not use abrasive cleaners and/or cleaning implements that could damage or scratch the surface of the display. To clean any residues off the surface of the display, we advise the following procedure:

- Apply kerosene or ethyl alcohol with a clean soft cloth
- Then clean with fresh water and rub with a clean soft cloth

Remove the transparent protective film from the display

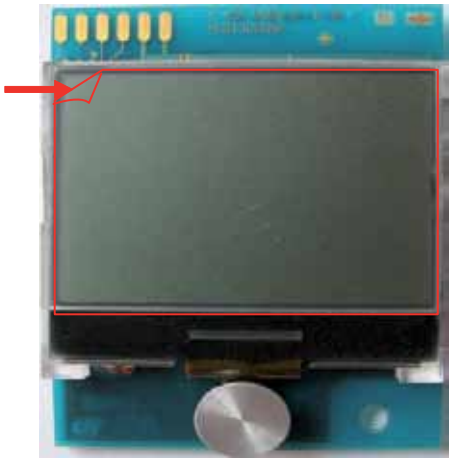

Insert the display into the aperture and push up to the stop. Fix with the screw provided (3 x 6 Torx plus).

Finally, replace the cover of the PCD2.M5_ housing (see section 3.5.3).

3.19.3 Function and use

Joystick to navigate within the menu

Pressing the up, down, left and right keys allows:

- movement and selection of different menu options
- modification of numeric values

Pressing on the centre generates an ENTER command

Moving between different menu options

Example: Pressing twice to the left moves from "PCD sys" to "Config".

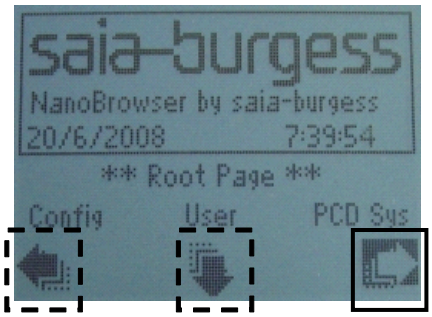

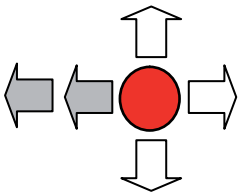

Changing a numeric value

Select a field with a numeric value using the joystick and then press ENTER.

Example:

- Select value: move joystick up or down to increase or decrease value (0 1 2 3 4 5 6 7 8 9 + -)
- Press left to select the left-hand digit. The perform the same operation as for the previous digit
- When you reach the right value, press ENTER
- Change applied

Changing an alphanumeric character

Select a field with editable numeric value or alphanumeric character (small letter only) with the navigation switch then press ENTER.

Example:

Changing the html user start page.

- Change one (or several) character(s)

Select the user start html field then pressing enter. Move the cursor left and right with the navigation switch to select the character that you want to change, then move the navigation switch up and down to select the new character.

- Add one character at first position

Select the user start html field then pressing enter, the first character is selected. Move the cursor with navigation switch left and select the character that you want to

add then press enter.

→‘start.html’ becomes ‘astart.html’

- In order to delete a character at „end“ position he can just make a space sign “out” of the character you want to delete. -> ‘start.html’ becomes ‘start.htm ‘ -> ‘start.htm’)

- You cannot delete a character at „first“ position. Re-write the name. Example: ‘ estart.html’

- You cannot delete the space character at left. Rewrite ‘estart.html’

Available characters
/available numbers and characters in edit mode:
const char digitFloatList[ ] = {‘0’,’1’,’2’,’3’,’4’,’5’,’6’,’7’,’8’,’9’, ‘ .’, ‘-’, ‘+’, ‘ ‘};

//for string editing mode

char signList[ ] = { ‘a’,’b’,’c’,’d’,’e’,’f’,’g’,’h’,’i’,’j’,’k’,’l’,’m’,’n’,’o’,’p’,’q’,’r’,’s’,’t’,’u’,’v’,’w’,’x’,’y’,’z’,’ ‘

‘-‘_”0’,’1’,’2’,’3’,’4’,’5’,’6’,’7’,’8’,’9’ ‘ ‘};

Character Editing does work for PPO with STRING format

PCD texts can be editable with the eDisplay, only if the texts are in „small letters“ (and with STRING format).

3.19.4 Structure of the setup menu

The setup menu was created with the web-editor. The setup menu project is included in the PCD2 firmware.

Root Page

The root page is the first page which is displayed after “switch on” the PCD

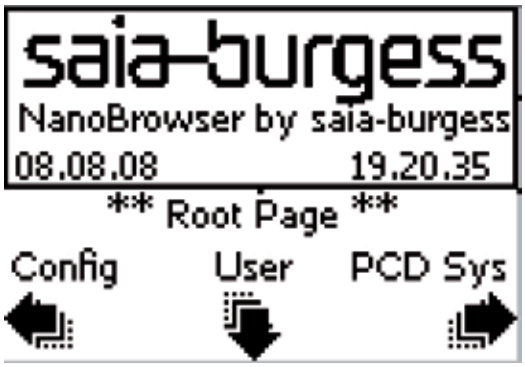

Date & Hour		Date & Hour of the PCD (cfg Tag)	
Config	Arrow button	To jump the configuration pages	See topic 4.2.& 4.3
PCD Syst	Arrow button	To jump the PCD system pages	See topic 4.4 to 4.6
User	Arrow button	To jump manually to the user program	See topic 8

Configuration page 1

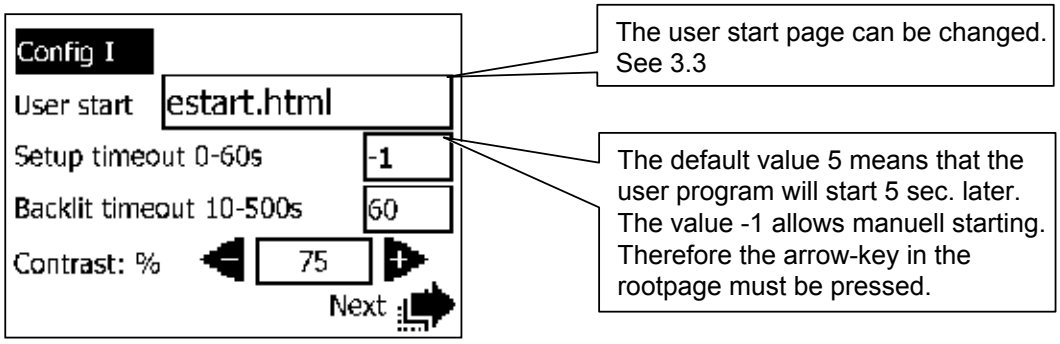

Menu point	Description	min	max	Default	comment
User start page	Start page of the user program	2*	16*	estart.html	Editable * = text length
Setup timeout*	Time in seconds to wait in root page before loading user project.	-1...0	60	5	When -1, the user project is started manually (time = ∞) by clicking on the USER arrow button
Backlit timeout	Time in seconds to wait till backlight is switched off.	10	500	60	**0 is prohibited**
Contrast	Contrast of the display in %	25	100	75	By steps of 25 (25 - 50 - 75 and 100)

* Setup timeout: This timeout can be increased up to 60 sec (value is 60) and up to “∞ “ (value is -1). Using the intermediate values 0 to 2 is injudicious because we have not enough reaction time to stay in the setup menu.

Configuration page 2

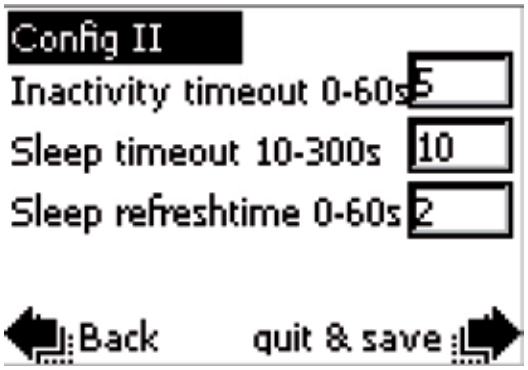

PCD system page 1

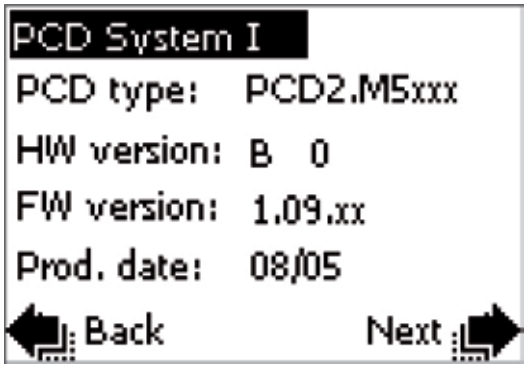

PCD type	Reference of the PCD2.M5	Read only
HW version	Hardware version of the PCD2	Read only
FW version	Firmware version of the PCD2	Read only
Prod. date	Production date of the PCD2 (year & week)	Read only
Back	Back to the root menu	Read only
Next	Go to the PCD system page 2	Read only

PCD system page 2

PCD Status	Status of the PCD2: RUN / HALT	Read only
Serial Nr.	Serial Number of the PCD2	Read only
Program name:	Name of the PG5 Program (can be cut at end)	Read only
S-bus Address	S-bus address of the PCD2	Read/ write
Back	Back the PCD system page 1	
Next	Go the PCD system page 3	

PCD system page 3

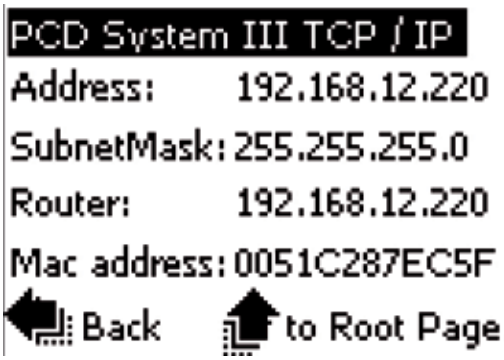

IP Address	TCP/IP address of the PCD2	Read/ write
SubnetMask	Subnet Mask address	Read/ write
Router	Router address	Read/ write
Mac address	Mac address of the PCD2	Read only
Back	Back the PCD system page 2	
To root page	Go the root page	

3.19.5 PG5 Device configuration for eDisplay

With the PG5 SP 2.0.150 you can configure the setup menu of the “eDisplay”.
This is available in combination with PCD2.M5xxx firmware version ≥ 1.14.11

In the Device configurator:
Select the display module PCD7.D3100E

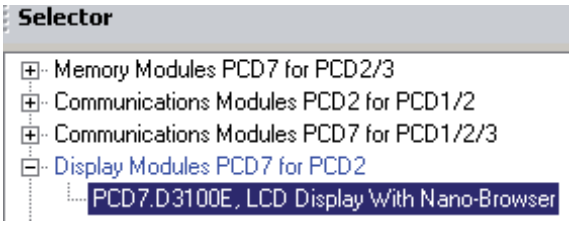

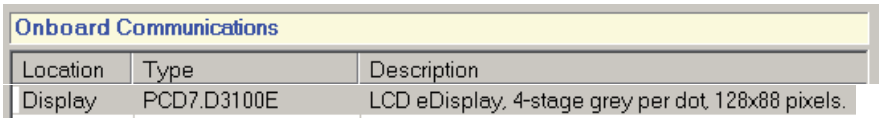

Then adapt the default values

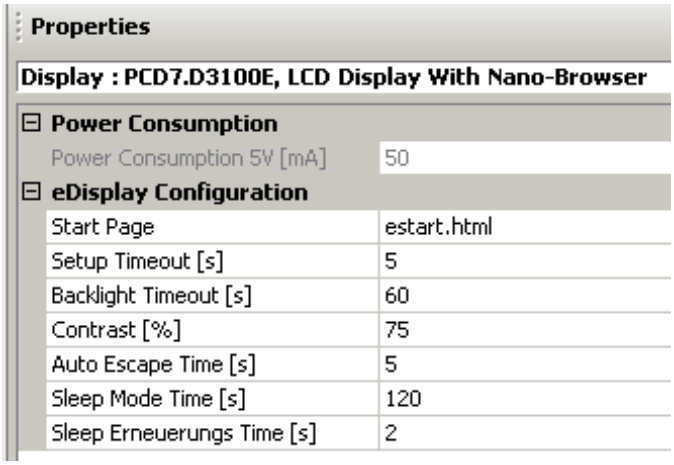

Explanations and mini/max values: see the topics 4.2 and 4.3

3.19.6 USER project

What you must know to create a user project (recommendation)

User project start name

The default html user project start name is ‘estart.html’ – to change the html name see topic 3.3. Character Editing does work for PPO with STRING format

Maximum of PPOs, containers, painters … per project and per view

	nber
Max PPO per project	100
Max Container per project	16
Max HTML Tag per project	1000
Max PPO per view	30
Max Container per view	16
Max HTML Tag per view	1000
Max Painter per view	20

See also /Web Editor/ SaiaDefaultSpiderHWProfile.shp

Fonts

Don’t use any fonts. Please refer to the topic 5.3. In the project configuration, select Tahoma regular 8,10 or 12 as default font.

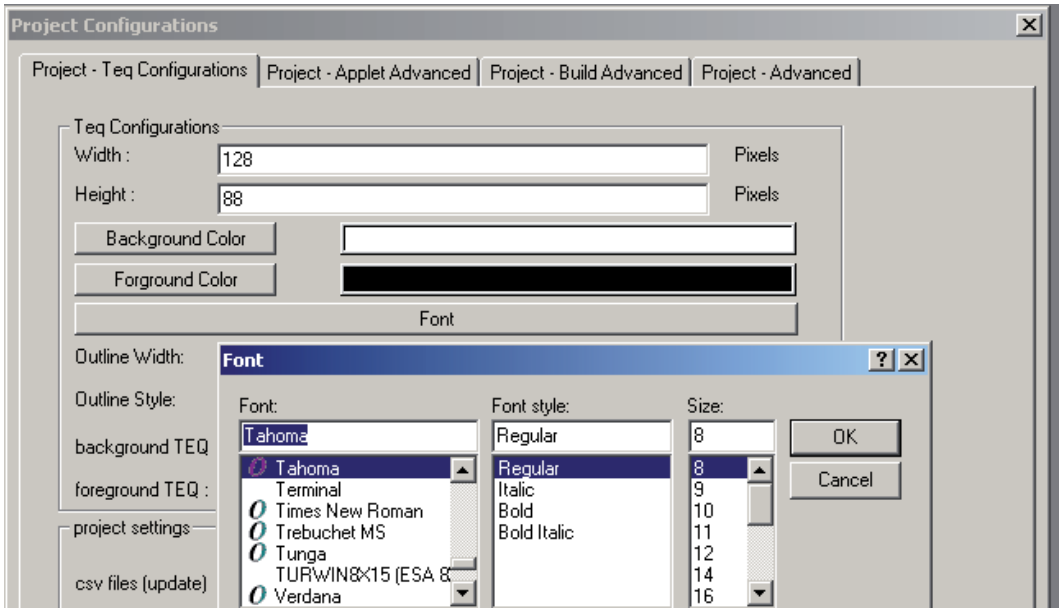

Set focus macro

Cause of the system of navigation (no touch screen) , one but only one “EventP_Set-Focus_onGainFocus” macro is necessary in each teq view. You advice to put this macro under a Jump action to another page.

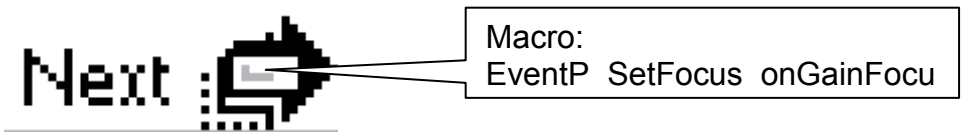

Web-editor Build advanced

Always, have a look to the Web-editor Build advanced before compiling !!

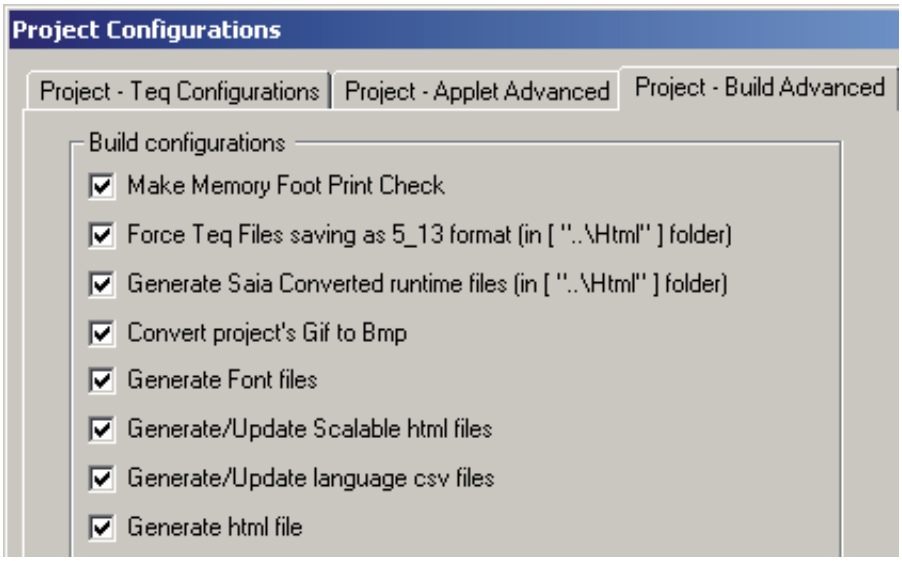

Jump to the setup menu

→ Access to the setup menu without switch off the PCD.
Recommendation:
Add a button with an “URL jump” to the “saiaedsetup.html”

Known restriction

- Edit boxes do not support grey interior color but only black or white

3.19.7 Web-Editor

Web-Editor Version

At least Version 5.14.23 or higher is necessary to start with the eDisplay with Firmware 51. Reduced eDisplay functionality is available with delivered license key.

Specific Project Settings for eDisplay

This software version integrates new functionalities which are essential for the good implementation of a project for the eDisplay

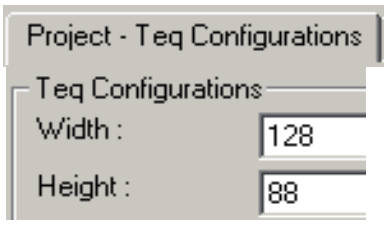

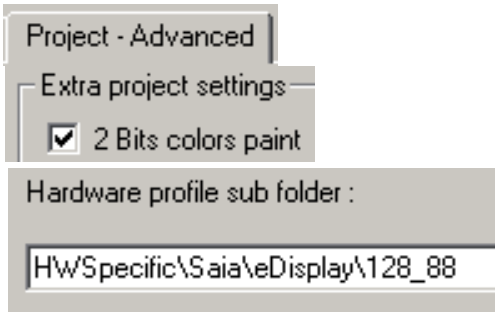

Default Fonts, Fonts and Font generator

Default Fonts:
The two default fonts and size are:
- Tahoma regular 8
- Tahoma regular 12

These fonts can be used in all cases, for PPOs, Containers, Strings or html tags.

Font generator
The use of other character sets and font sizes is possible with the font generator, which has been incorporated in this version. The relevant .fnt files are created automatically during the Web-Editor's «build».

Project configuration: 

Fonts

Painters	Format	Tahoma regular 8	Tahoma regular 12	Add font 1	Add font 2	Add font 3	Add font 4
Button + Static text	String	x	x				
	PPO	x	x				
	Container	x	x				
	Html Tag	x	x	x	x	x	x
Edit-box	PPO	x	x				
	Container	x	x				
Multi-line label	String	x	x				
	Html Tag	x	x	x	x	x	x
Macros							
Table control		x	x				
Drop down PPO		x	x				
Drop down html tag		x	x	x	x	x	x

Values are not displayed if edit boxes use other fonts than default Tahoma fonts 8 or 12.For example Arial 10,11,14,16 etc do not display values.

Exception regarding Edit Box fonts: You can select other fonts than Tahoma 8 and 10, provided that the selected fonts be already used as fonts for STATICTEXT (HTML TAG format)

Gif to Bmp converter

The eDisplay displays only monochrome pictures (icons) in bmp format.

This software version contains a GIF to BMP format convertor, enabling you to display bmp pictures without having to use a special editor for conversion.

Project configuration: ☑ Convert project's Gif to Bmp

The Web-Editor project will have to be compiled, remembering to select the options: « Generate Spider Font files » and/or « Convert project's Gif to Bmp »

Creation of .fnt and .bmp files then takes place automatically.

Macros valid for eDisplay

Macro names	Status	Listed in Web-editor 5.14.27
EventP_SetFocus_onGainFocus_5_13_05.esm	Indispensable macro for each .teq view (see topic 5.1.4)	yes
eD_EventP_URLJump_isEqual_5_14_03.esm	Ok	yes
eD_ButonURLJump_onMouseDown_5_14_03.esm	Ok	yes
eD_EventP_ViewJump_onTimeout_5_14_03.esm	Ok	yes
eD_EventP_ViewJump_isEqual_5_14_03.esm	Ok	yes
eD_EventP_Logout_onTimeout_5_14_03.esm	Ok	yes
eD_EventP_writeSrc2Dst_onLost_5_14_03.esm	Ok	yes
eD_EventP_writeSrc2Dst_onRepaint_5_14_03.esm	Ok	yes
eD_EventP_writeSrc2Dst_onGain_5_14_03.esm	Ok	yes
eD_EventP_writeSrc2Dst_isEqual_5_14_03.esm	Ok	yes
eD_PasswordDialog_UserLevel_5_14_26.esm	Ok	yes
eD_DropDownList_5_14_03.esm	Ok	yes
eD_DropDownList_5_13_40.esm	Ok	yes
eD_TableControl_EditablePPO_PageJump_5_13_17.esm	Ok	yes
eD_EventP_URLJump_onTimeout_5_14_03.esm	Don't use it	yes
eD_Blinker_5_14_03.esm	Ok !! @BLINKO container variable does not blink with 1 sec/1 sec. for the period of 1 sec but with faster frequency.	yes

- All this macros are part of the Web Editor package under: HWSpecific/Saia/eDisplay/128_88/MacroLib

3.19.8 Browse the eDisplay pages on the PC

Browse the setup menu pages on the PC

The setup menu pages (x6) are part and parcel of the PCD2 firmware.
As any web pages, you can browse the setup menu pages on a PC.
Actually the setup menu was compiled with Web-editor 5_14_27, the imaster file is IMasterSaia5_14_27.jar

What's the drill? Copy the IMasterSaia5_14_27.jar into the flash module PCD7. R550xxx.

Browse setup menu html files in 3 different sizes:

Scale 1:1→ http:// IPaddress/saiaedsetup.html
Scale 3:1→ http:// IPaddress/saiaedsetupx3.html
Scale 5:1→ http:// IPaddress/saiaedsetupVGA.html
(the scale 5:1 allows to display the setup pages in ~ VGA size → 640 x 440 pixels)

→To use this feature, the file *IMASTERSAIA5_14_27.JAR* needs to be copied on the flash module PCD7.R550.

Browse the User project pages on the PC

As any web pages, you can browse your user project on a PC.

- IMASTERSAIAx_xx_xx.JAR is necessary!
Use the same IMasterSaia5_14_27.jar version number as your web-editor version.
If you compile your user project with the Web-editor 5.14.27. you need the IMaster-Saia5_14_27.jar to browse the project on the PC.
If you compile your user project with a new Web-editor 5.nn.nn version, you need the IMasterSaia5_nn_nn.jar to browse the project on the PC.

What's the drill? Copy the IMasterSaia_5_14_27.jar or other into the flash module PCD7.R550xxx. (The IMasterSaia5_x,xx.jar version must always be corresponding to the web-editor version)

Use the scalable function of the Web Editor to create scalable html files.
We suggest to use the scale x3 or x5 in order to increase the teq pages with the same ration as the the setup menu pages (see chapter 7.1)

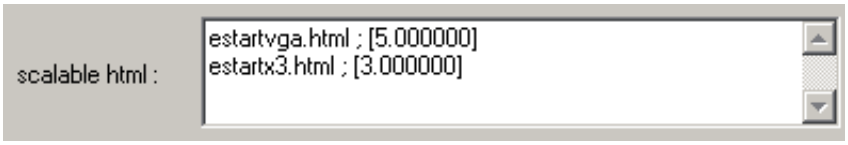

Error Message:

Out of memory heap 2:

- Info Ininet regarding Heap 2:
Heap2 (1040 Bytes) is in case of NanoBrowser only used for Container variables.
Container variables have a fixed value length but variable name lengths.
The editor does not make a byte calculation but there is a limit given in the SpiderH-WProfile.shp Hardware profile. There is no number of macro limitations.

Look the SpiderHWProfile.txt under the directory "web editor".This is automatically generated by the web editor during compiling !!!!

4 RIO (remote input/output) head stations

PCD3.RIOs (remote I/Os) are used to capture decentralized I/O signals. PCD3. RIOs can communicate via Profibus-DP with any master PCD; this may be via the integrated Profi-S I/O on the PCD2.M5xx0.

A detailed description can be found in section 4 of the PCD3 Manual 26/789.

5 PCD2.M5xx0 Communication interfaces

Using the Saia® S-Bus

The proprietary Saia S-Bus has been designed essentially for communication with the engineering and debugging tools, and for connecting the management level/process control systems.

It is neither suitable nor approved for the connection of field devices from diverse manufacturers. An open, vendor-neutral fieldbus will be more effective in achieving this end.

Saia®S-Net, the networking concept from Saia-Burgess Controls, is based on the RS485, Profibus and Ethernet open standards. Ethernet covers layers 1 and 2 of the ISO/OSI layer model. Based on layer 2, a variety of different protocols and applications can be run in parallel on the same network.

Layer 2 (Field Data Link-FDL) from Profibus also allows parallel running of different application protocols such as DP, FMS and others. The use of this facility allows Profi S-Net to be used to create a "Private Control Network (PCN)". This makes all Saia® units into active network components.

Profibus Layer 2 (FDL) is integrated into the operating system of the PCD2.M5_ CPUs, giving these units a Profi S-Net connection with transmission speeds up to 1.5 Mbp/s.

The devices support Profibus DP and S-Net on the same port. This allows Profibus-based networks to be constructed cheaply and flexibly.

The PCD2.M5_ type controls have a Saia®NT operating system with which higher transfer speeds (Saia®S-Bus up to 115 kBit/s) can be achieved; however, lower baud rates (300 and 600 Baud/sec.) are no longer supported.

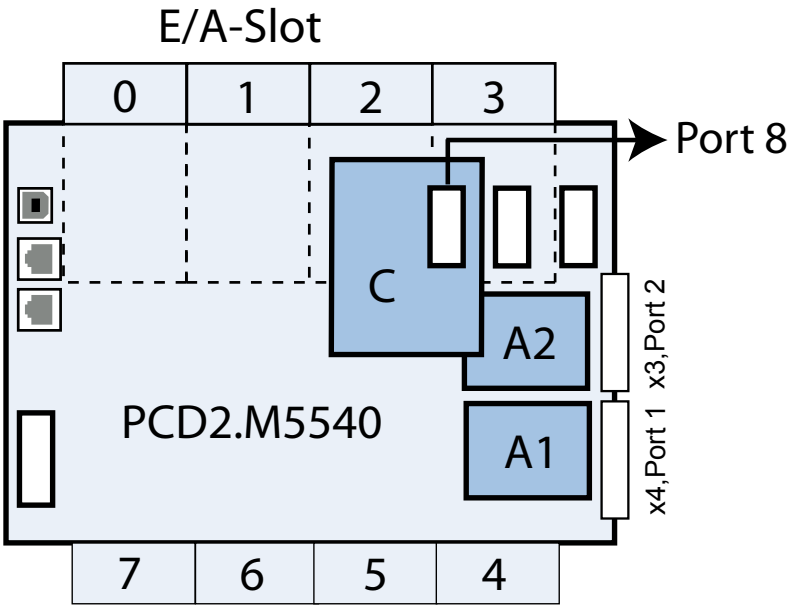

5.1 Onboard interfaces

Onboard interfaces	Port (in PG5)	max. baud rate	PCD2.M5440	PCD2.M5540
D-Sub x2 (PGU)				
RS232 (serial)	0	115.2 kBit/s	✓	✓
Terminal block				
RS485 (serial)	0	115.2 kBit/s	✓	✓
D-Sub x1				
RS485 (serial)	3	115.2 kBit/s	✓	✓
Profi-S-Net/DP Slave	10	1.5 MBit/s	✓	✓
Ethernet	9	10/100 MBit/s		✓
USB 1.1 Slave (PGU)			✓	✓

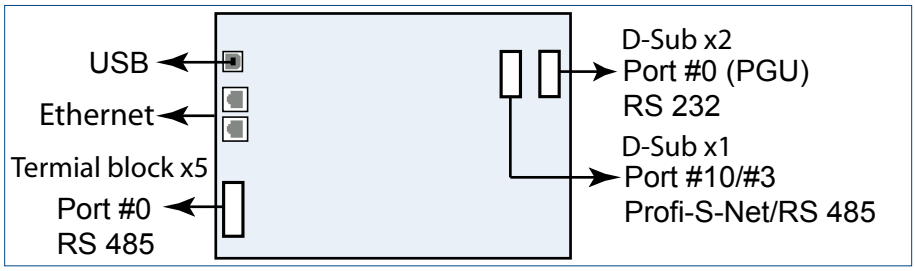

5.2 Plug-in communication interfaces

Base unit with sockets for plug-in communication modules	Summary of plug-in communication modules							
		Serial					CAN	Profibus
	Socket	PCD7.F110	PCD7.F121[1]	PCD7.F130	PCD7.F150	PCD7.F180	PCD7.F7400	PCD7.F7500
PCD2.M5_ 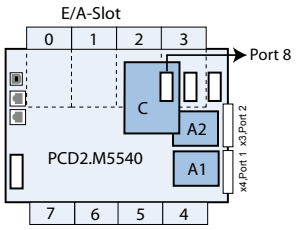	A1	Port 1					-	-
	A2	Port 2					-	-
	C	-	-	-	-	-	Port 8	

1) Suitable for modem connection, as 6 control lines provided

5.3 Onboard interfaces

5.3.1 PGU connector (PORT#0) (RS232) for connecting programming devices

The PGU interface (Port#0) is connected to a 9-pole D-Sub connector (female). The interface is used to connect the programming device when the unit is commissioned.

The interface is of type RS232c.

The pin configuration and associated signals are:

Pin	Designation	Meaning	
1	DCD	Data carrier detected	A device is signalling to the computer that it has detected data on the line
2	RXD	Receive data	Line for reception of data
3	TXD	Transmit data	Line for outgoing (sent) data
4	DTR	Data Terminal Ready	Data Terminal Ready
5	SGN	Signal ground	Signal ground. The signal voltages are measured against this line
6	DSR	PGU connected	PGU detection. A connected device is signalling to the computer that is it ready for use when there is a logical "1" on this line
7	RTS	Request to send	When this line is set to a logical "1", the device is ready to send data
8	CTS	Clear to send	When this line is set to a logical "1", the device can receive data
9	+5 V		

The PGU protocol is provided for operation with a programming device. The use of the PCD8.P800 service unit is supported from firmware version $301 for all PCD2 controllers.

PCD8.K111 connecting cable

(P8 and S-Bus protocol, suitable for all PCD2 units)

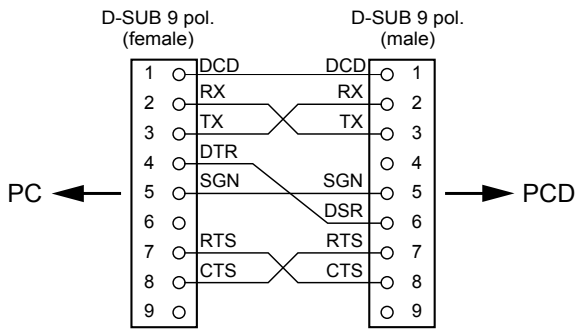

5.3.2 PGU connection (PORT#0) (RS232) as communication interface

When commissioning/programming are complete, the port can be used for other purposes.

Option 1: Configuration with desired protocol
(S-Bus PGU configuration)

Option 2: Assignment (SASI) in the user program
(the port must not be configured as an S-Bus PGU port)

- If another programming device is connected during operation instead of the peripheral device, the unit will switch over automatically to PGU mode (pin 6 logical "1" (DSR); in PGU mode: DSR PING = “1”).
- Before using the port to connect another peripheral device, Port 0 must be reconfigured by means of an SASI instruction.

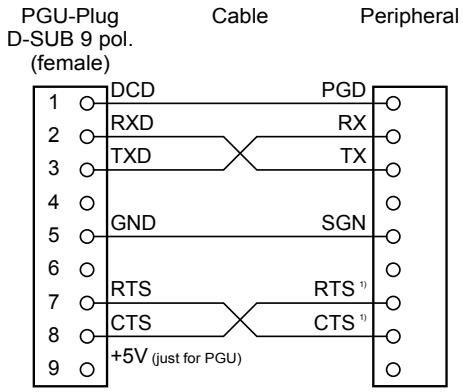

1) When communicating with terminals, check whether some connections are equipped with bridges or need to be set with the "SOCL" command to "1" or "0". It is generally recommended to use a handshake (RTS/CTS).

5.3.3 PGU connection (PORT#0) (RS485) as communication interface

If Port 0 is not used via the PGU connection (with the programming device or as an RS232 interface), it can be used via terminals 28 and 29 for an S-Bus or MC4 connection.

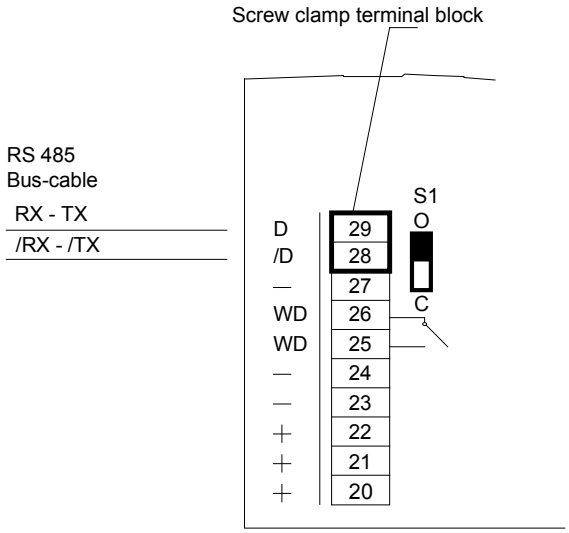

Choice of termination resistors

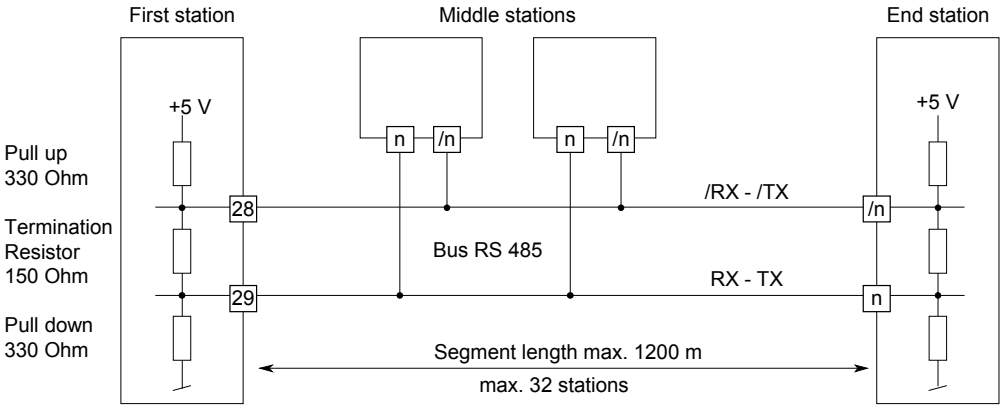

At the first and last stations, switch S1 must be set to "C" (closed).

At all other stations, switch S1 must be left in position set to "O" (factory setting).

5.3.4 USB port as PGU interface

The USB port can only be used as a PGU interface. This leaves the PGU connector free for other communication links (RS232).

In order to use the USB interface, PG5 version 1.4.200 or later must be installed.

When the PCD is first connected to a PC via the USB interface, the PC operating system automatically installs the appropriate USB driver

To establish a connection with a PCD via USB, the following settings must be entered in the online settings for the PG5 project:

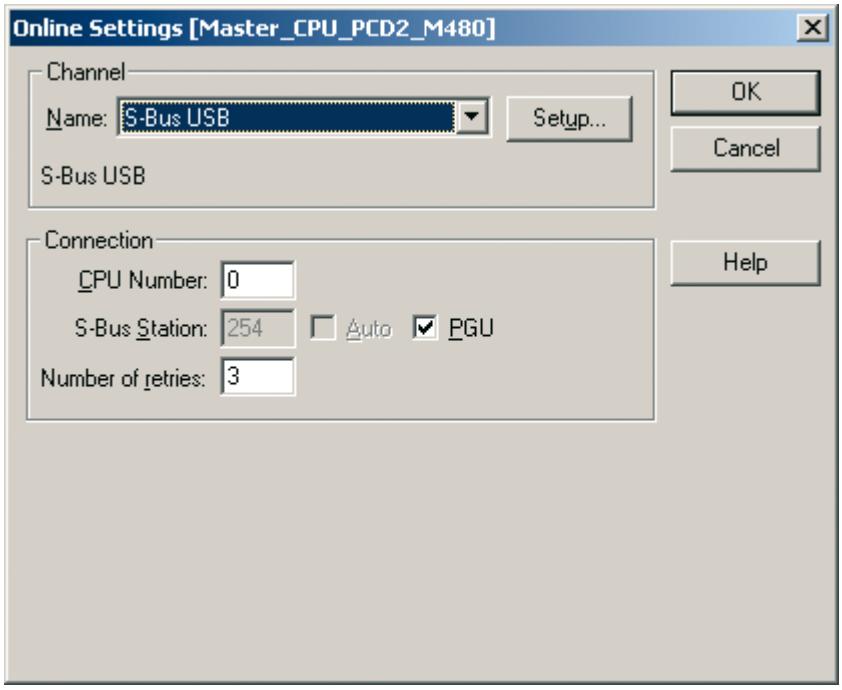

Activating the PGU option ensures that the PCD connected directly to the PC can be reached, regardless of the S-Bus address that has been configured.

5.3.5 D-Sub x1 S-Net/MPI

The PCD2.M5_ is equipped with a Profi S-Net interface as standard. This can be used both for programming and for communication with other CPUs (that support Profi S-Bus) and/or Saia RIOs.

Technical details:

Transmission rates: up to 1.5 MBit/s
Number of stations: up to 124 stations in segments of 32 stations each
Protocols: Profi S-Bus, Profi S-IO, DP Slave, HTTP in preparation (multi-protocol operation on the same interface)

Connection diagram

Port 10 or 3 Port 0

S-Net/MPI/RS485 Port 10 or 3		
D-Sub pin	signal	Explanation
1	PGND	GND
2	GND	0 V of 24 V supply
3	RxD/TxD-P[1]) B (red)	Receive/transmit data positive
4	RTS/CNTR-P	Control signal for repeater (direction control)
5	SGND[1])	Date communication potential (earth to 5 V)
6	+5V [1)]	Supply voltage to P line termination resistors
7	MPI24V	Output voltage plus 24 V
8	RxD/TxD-N[1]) A (green)	Receive/send data negative
9	not used	

[1)] Mandatory signals (must be provided by the user). Specially the both signals SGND and +5V are provi ded by the PCD, if the Profibus configuration is correct.

Port 10: Pins 3, 4, 5, 6 and 8 are insulated from the system. Pin 2 serves as a backlink for Pin 7.

For details of the configuration and programming of Profi S-Net functions, please consult the specialised manuals.

5.4 Plug-in interface modules - Slots A1 and A2

5.4.1 RS485/422 with PCD7.F110, Port#1 & Port#2

Connection for RS485

PCD7.F110:
RS422 with RTS/CTS or RS485 electrically connected, with line termination resistors capable of activation, for Slots A1, A2.

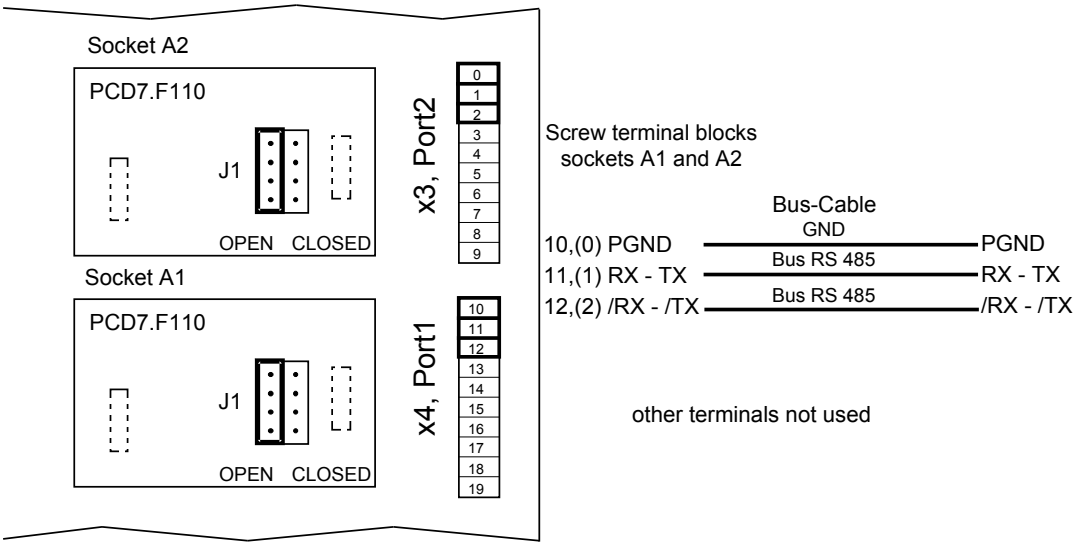

Choice of termination resistors

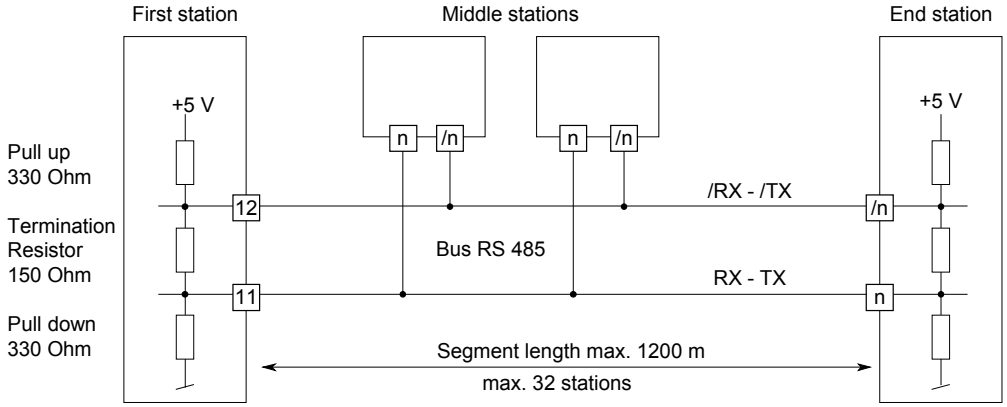

Not all manufacturers use the same connection configuration, so the data lines may need to be crossed

At the first and last stations, jumper J1 must be set to the "CLOSED“ position.
At all other stations, jumper J1 must be set to "OPEN" (factory setting). The jumper is on the connection side of the module.

For details, see manual 26/740 “Installation components for RS485 networks”

Connection for RS422

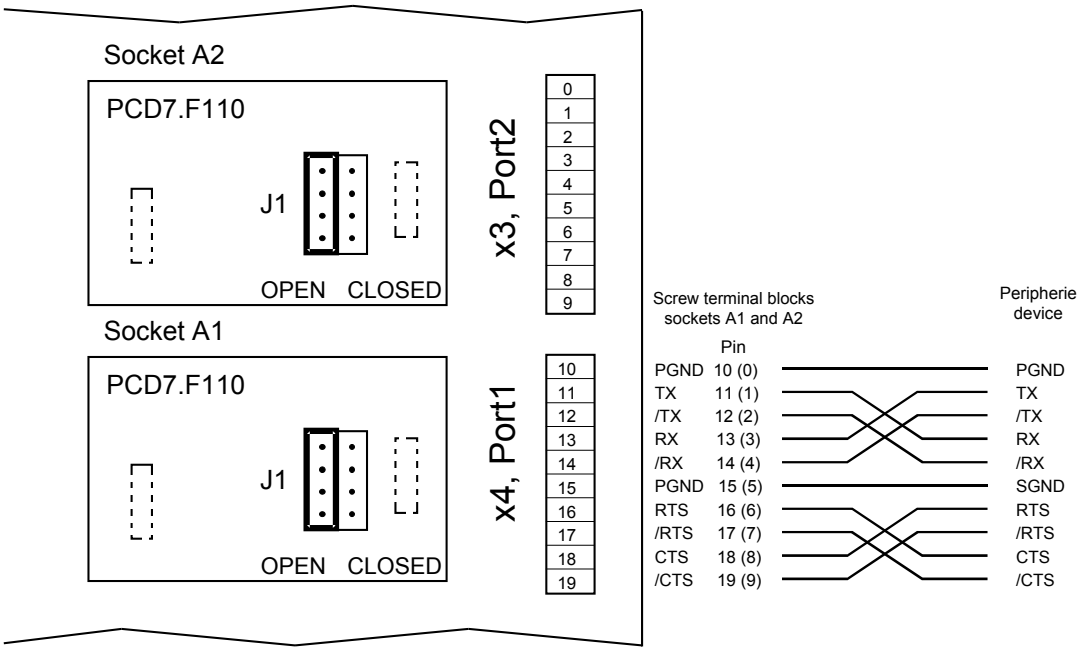

For RS422, each pair of receive lines is terminated with a 150 Ω line termination resistor. Jumper J1 must be left in the “OPEN” position (factory setting). The jumper is on the connection side of the module.

5.4.2 RS232 with PCD7.F121, Port#1 & Port#2

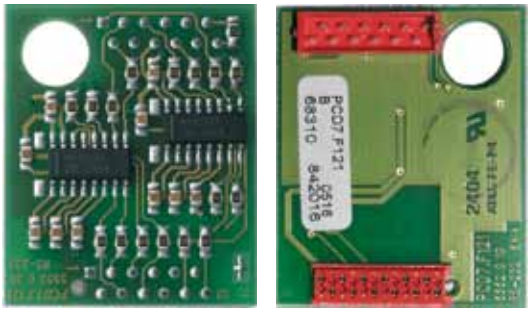

PCD7.F121:
RS232 with RTS/CTS, DTR/DSR, DCD, suitable for modem connection, for Slots A1, A2

The module can be used at up to 115,200 Baud.

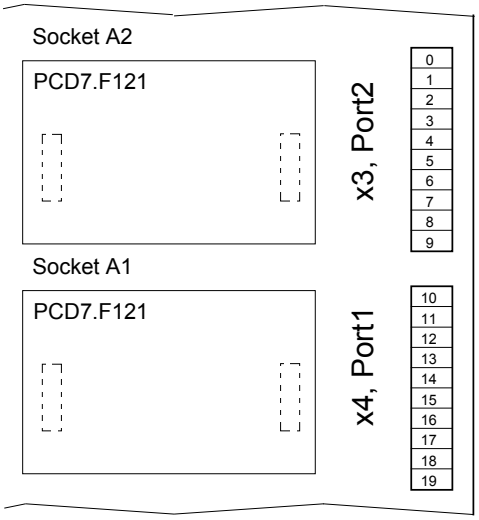

Screw terminal blocks, sockets A1and A2	Pin	cable	Peripherie device (DTE)	D-Sub f 9 pol. (e.g. PC)	D-Sub m 25 pol. (e.g. PC)
PGND	10 (0)		PGND		
TXD	11 (1)		TX	3	2
RXD	12 (2)		RX	2	3
RTS	13 (3)		RTS	7	4
CTS	14 (4)		CTS	8	5
PGND	15 (5)		SGND	5	7
DTR	16 (6)		DTR	4	20
DSR	17 (7)		DSR	6	6
Reserve	18 (8)				
DCD	19 (9)		DCD	1	8

RS232 interface, for external modem (DCE)

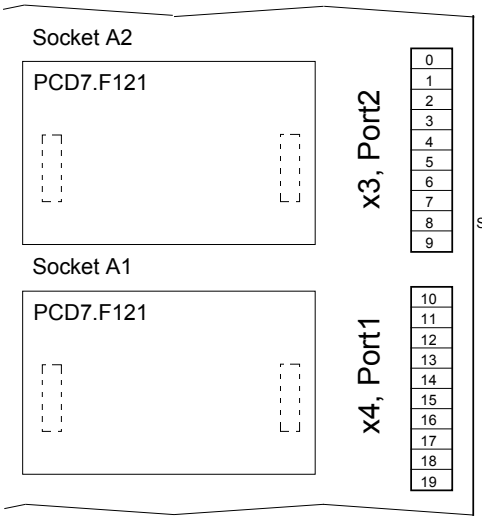

Screw terminal blocks, sockets A1 and A2	Pin	cable	Peripherie device (DTE)	D-Sub f 9 pol. (e.g. PC)	D-Sub m 25 pol. (e.g. PC)
PGND	10 (0)		PGND		
TXD	11 (1)		TX	3	2
RXD	12 (2)		RX	2	3
RTS	13 (3)		RTS	7	4
CTS	14 (4)		CTS	8	5
PGND	15 (5)		SGND	5	7
DTR	16 (6)		DTR	4	20
DSR	17 (7)		DSR	6	6
Reserve	18 (8)				
DCD	19 (9)		DCD	1	8

5.4.3 Current loop with PCD7.F130, Port#1 & Port#2

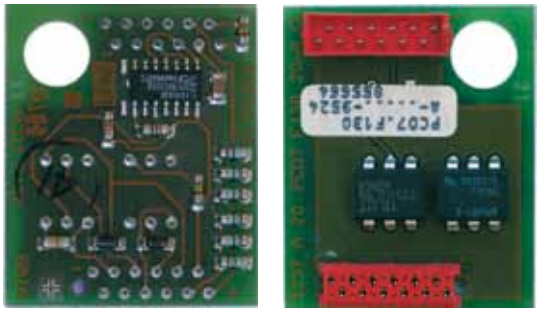

PCD7.F130:
TTY/current loop 20 mA (active or passive),
for Slots A1, A2.

Connections

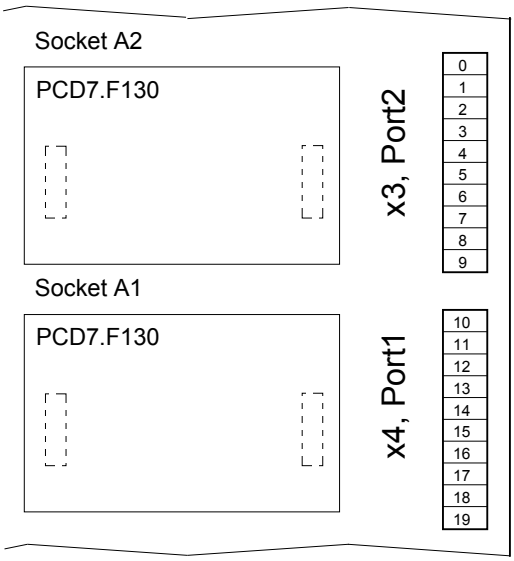

Screw terminal blocks,
sockets A1 and A2

TS	11 (1)
RS	12 (2)
TA	13 (3)
RA	14 (4)
-	
TC	16 (6)
RC	17 (7)
TG	18 (8)
RG	19 (9)

PCD active

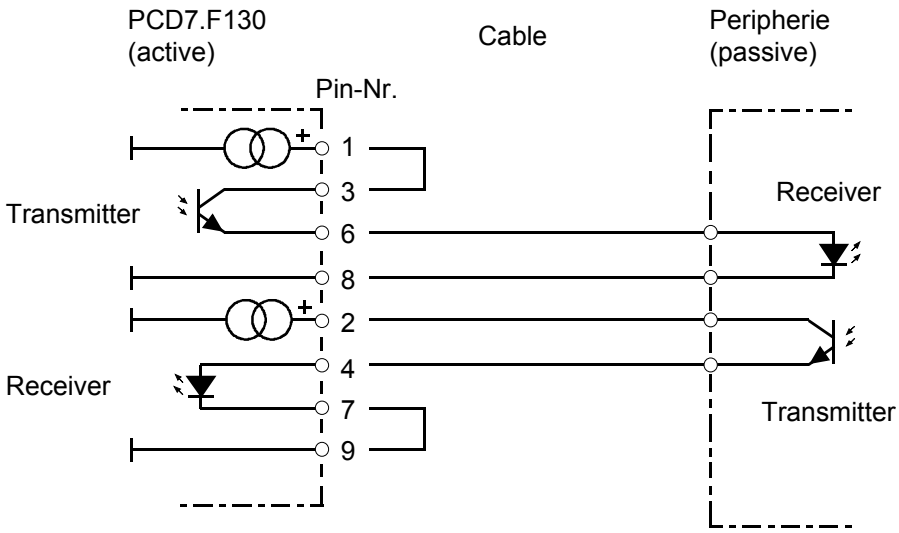

PCD passive

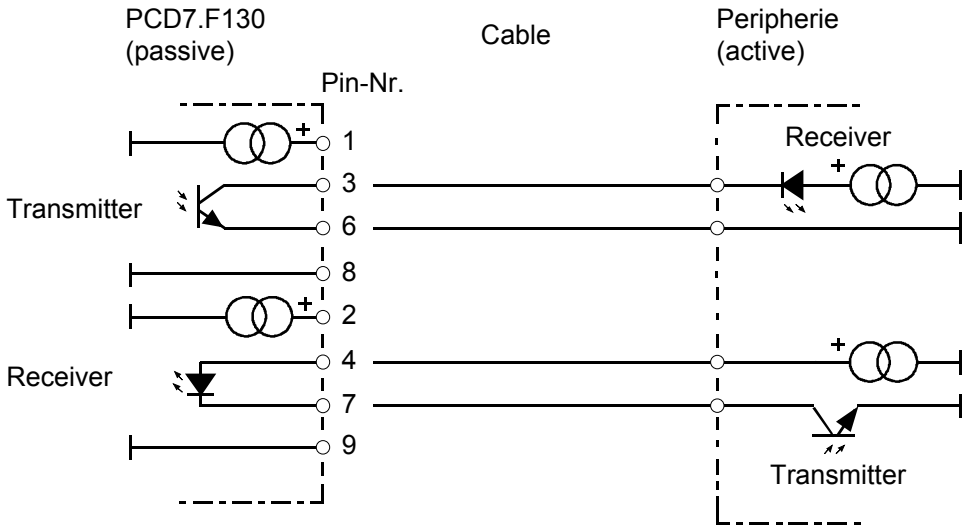

PCD and peripheral transmitters active

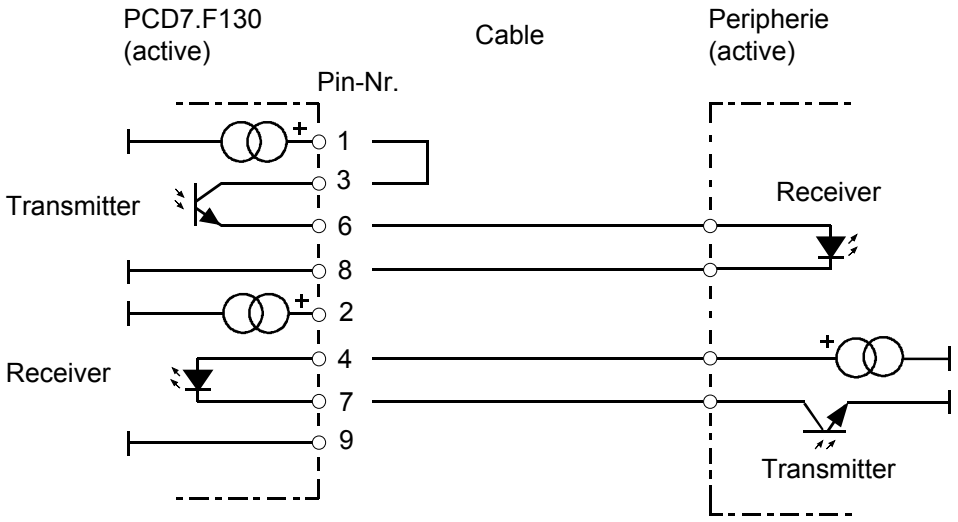

5.4.4 RS485 with PCD7.F150, Port#1 & Port#2

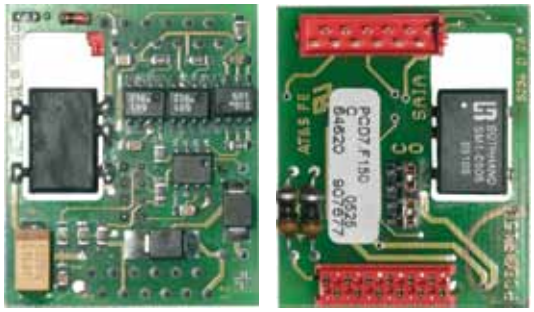

PCD7.F150:
Connection for RS485 with electrical isolation

The electrical isolation is achieved with 3 optocouplers and a DC/DC transducer. The data signals are protected against surges by a suppressor diode (10 V). The line termination resistors can be connected/disconnected with a jumper.

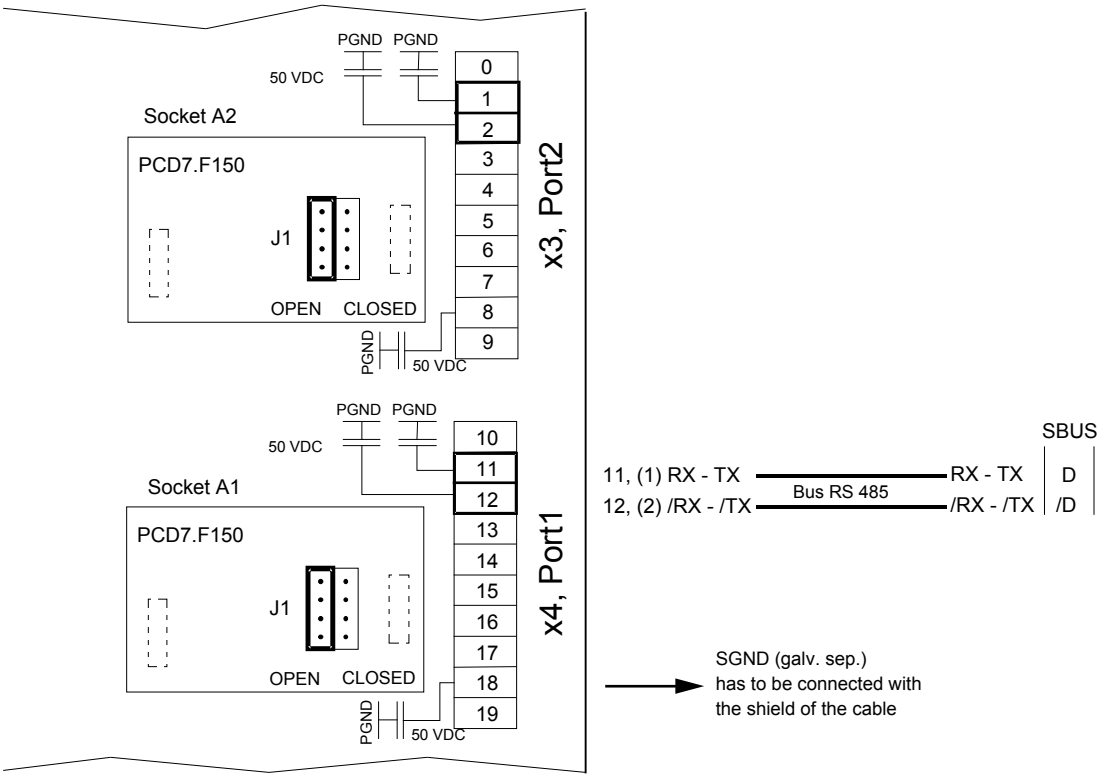

Block diagram:

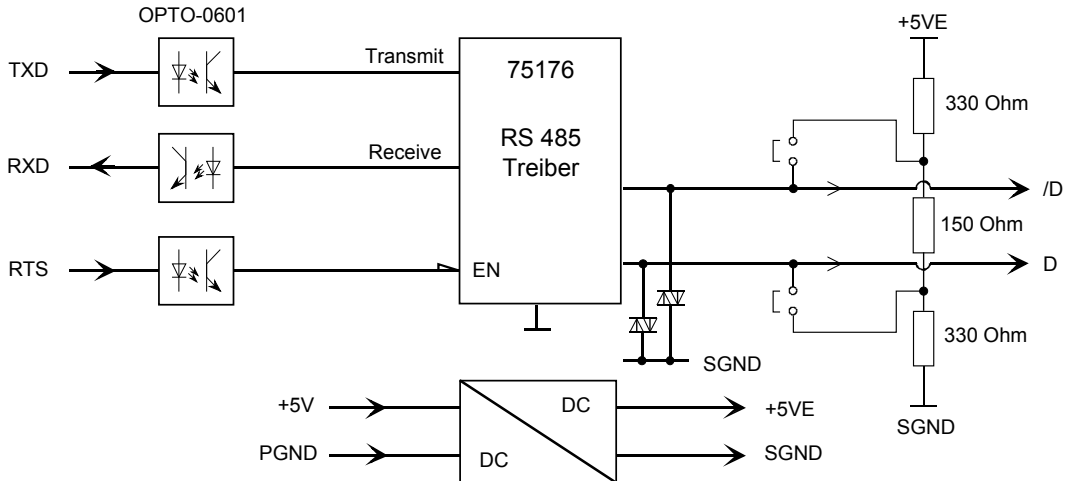

Not all manufacturers use the same connection configuration, so the data lines may need to be crossed

The potential difference between PGND and the data lines Rx-Tx, /Rx-/Tx (and SGND) is limited to 50 V by a suppressor capacitor.

For installation details, see manual 26/740 “Installation components for RS485 networks”

5.4.5 MP-Bus with PCD7.F180, Port#1 & Port#2

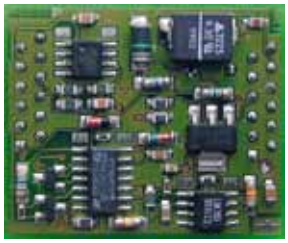

PCD7.F180:

Connection module to MP-Bus

The user can connect an MP-Bus line with 8 drives and sensors.

Connections

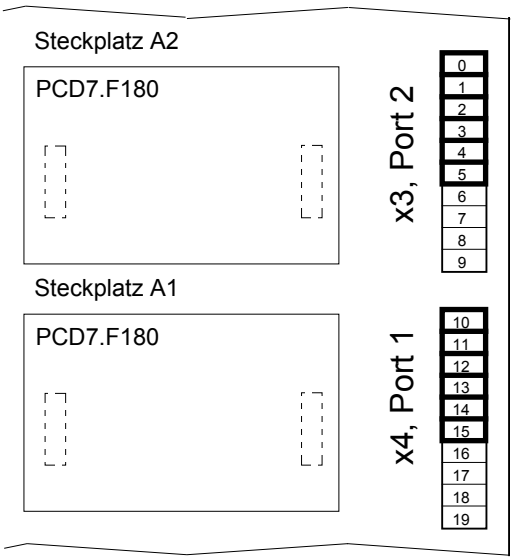

0, (0) -	GND (Strang A-)
1, (1) MP	MP-Bus Signalleitung (18V in/out)
2, (2) ,MFT'	MFT-Parametriergerät (MP-Bus intern)
3, (3) ,IN'	MFT-Parametriergerät Detektion (Input 10 kOhm, Z5V1)
4, (4) GND	Masse-Anschluss MFT-Parametriergerät
5, (5) -	GND

10, (0) -	GND (Strang A-)
11, (1) MP	MP-Bus Signalleitung (18V in/out)
12, (2) ,MFT'	MFT-Parametriergerät (MP-Bus intern)
13, (3) ,IN'	MFT-Parametriergerät Detektion (Input 10 kOhm, Z5V1)
14, (4) GND	Masse-Anschluss MFT-Parametriergerät
15, (5) -	GND

There are the following parameterization devices of BELIMO®:

Manual Control Unit	MFT-H	With its own power supply/batteries
PC-Tool	MFT-P	With the adapter ZIP-RS232

Supply option

Common supply for control and drive

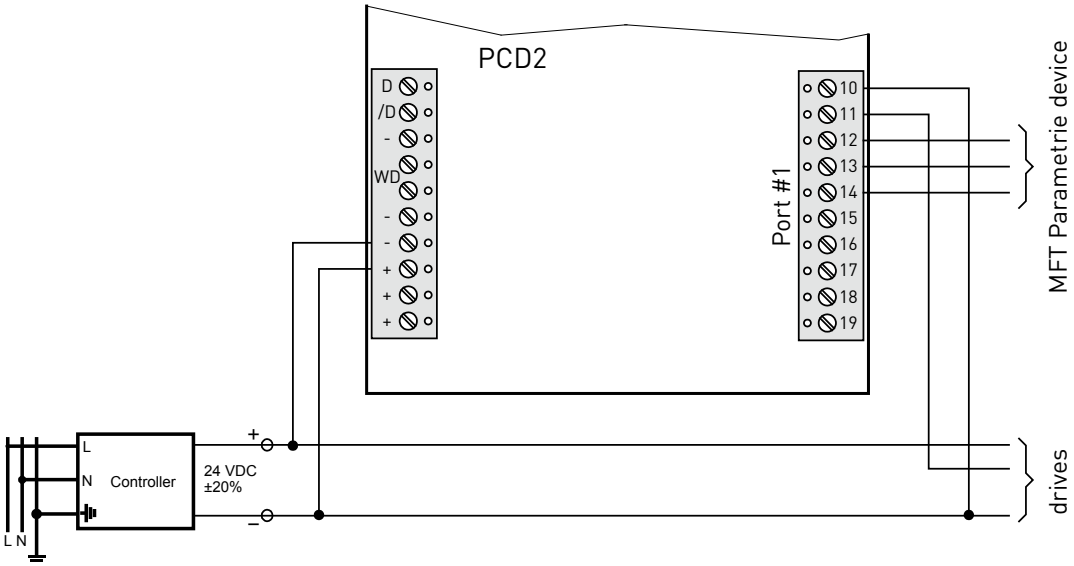

5.5 Serial interfaces on I/O module slots 0 - 3

5.5.1 General remarks on the PCD2.F2xxx

System properties of PCD2.F2xxx modules:

The following points must be observed when using the PCD2.F2xxx interface modules:

- For each PCD system, up to 4 PCD2.F2xxx modules (8 interfaces) can be used on slots 0…3.
- The PCD2.M5_ system has a powerful processor which handles the application as well as the serial interfaces. Processing of the interface modules requires the appropriate CPU capacity. To determine the maximum communication capacity per PCD2.M5_ system, note the following:
- The communication volume is determined by the peripheral devices connected. This will be the case, for example, where a PCD2 is used as an S-Bus slave station. If a PCD2 controller is bombarded with heavy telegram traffic at high baud rates, less CPU capacity will be left to handle the actual application. The following rules apply here: the use of 8 interfaces at 9.6 kbps takes approx. 50% of CPU capacity. Two interfaces at 57.6 kbps also take up approx. 50% of CPU capacity. Two interfaces at 115 kbps require approx. 60% of CPU capacity.
- If the PCD2 is the initiator of the communication, the communication volume, and hence the communication capacity, will be determined by the user program in the PCD2 (PCD2 used as master station). Theoretically, all interfaces can be run at the maximum baud rate of 115 kbps. However, the effective data throughput will be governed by the user program and the number of interfaces, and may be quite low. The crucial factor is that the peripheral devices connected can be run with the selected configuration and communication capacity.

5.5.2 Communication ports on the PCD2.M5_

The PCD2.F2xxx modules are designed for insertion into slots 0...3 on a PCD2.M5_. As shown in the figure below, the slots are designated as follows:

Slot 0:	Port 100 for the x.0 port on the PCD2.F2xxx module Port 101 for the x.1 port on the PCD2.F2xxx module
Slot 1:	Port 110 for the x.0 port on the PCD2.F2xxx module Port 111 for the x.1 port on the PCD2.F2xxx module
Slot 2:	Port 120 for the x.0 port on the PCD2.F2xxx module Port 121 for the x.1 port on the PCD2.F2xxx module
Slot 3:	Port 130 for the x.0 port on the PCD2.F2xxx module Port 131 for the x.1 port on the PCD2.F2xxx module

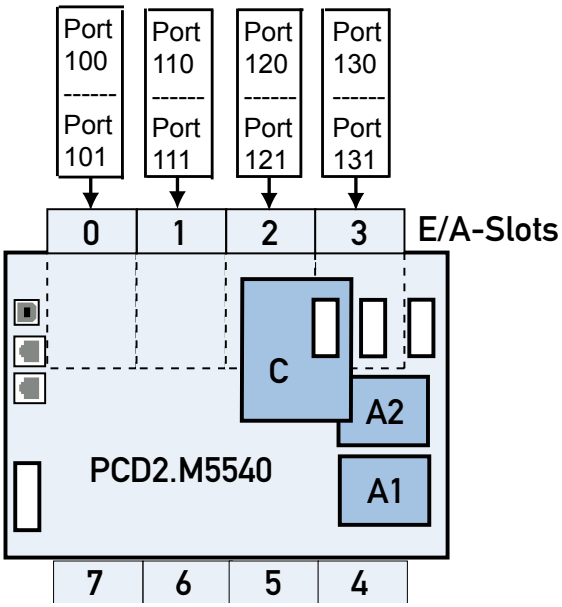

5.5.3 Module overview

The PCD2.F2xxx communication modules are designed for the PCD2.M5_ systems. Each module has two serial ports, one fixed interface and a second that can be established by the use of a PCD7.F1xx module.

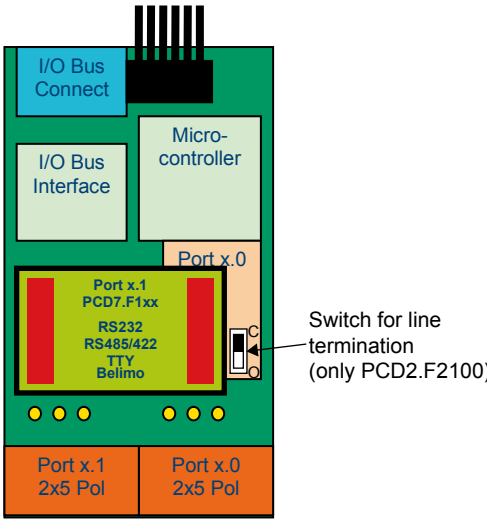

PCD2.F2100

Serial communication module with two serial interfaces
Port x.0: RS422 / RS485 (fixed on PCD2.F2100 module)
Port x.1: Slot for PCD7.F1xx module

PCD2.F2210

Serial communication module with two serial interfaces
Port x.0: RS232 (fixed on PCD2.F2210 module)
Port x.1: Slot for PCD7.F1xx module

PCD2.F2810

Serial communication module with two serial interfaces
Port x.0: Belimo MP-Bus (fixed on PCD2.F2810 module)
Port x.1: Slot for PCD7.F1xx module

Usable PCD7.F1xx modules (for connection to port x.1 on the PCD2.Fxxxx)

PCD7.F110 Serial interface module RS422 / RS485
PCD7.F121 Serial interface module RS232, for modem connection
PCD7.F130 Serial interface module, current loop 20 mA
PCD7.F150 Serial interface module, RS485, electrically isolated
PCD7.F180 Serial interface module for Belimo MP bus, for max. 8 actuators and sensors

Connections and LEDs

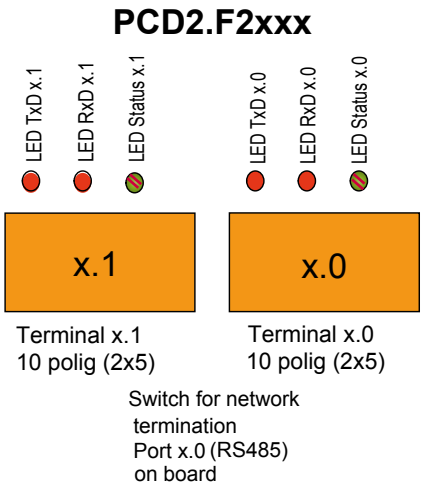

Summary of connections

RS232

0	PGND	TxD	1
2	RxD	RTS	3
4	CTS	PGND	5
6	DTR	DSR	7
8	COM	DCD	9

RS422

0	PGND	Tx	1
2	/Tx	Rx	3
4	/Rx	PGND	5
6	RTS	/RTS	7
8	CTS	/CTS	9

RS485

0	PGND	Rx-Tx	1
2	/Rx-/Tx		3
4		PGND	5
6			7
8	(SGD)		9

TTY (CL)

0	PGND	TS	1
2	RS	TA	3
4	RA	PGND	5
6	TC	RC	7
8	TG	RG	9

Belimo MP bus

0	PGND	MP	1
2	‚MFT'	‚IN'	3
4		PGND	5
6			7
8			9

Spring terminal block (supplied)

Each serial port has its own individual 10-pole spring terminal block. The F2xx module is fitted with two spring terminal blocks, the right-hand one for Port x.0 and the left for Port x.1.

Maximum wire gauge: 1.0 mm² AWG 18

LEDs

LED TxD: Send data detection
LED RxD: Receive data detection
LED status: The "Status" LED displays the status of the serial port, ‘green’ means that the port is working properly

- Both LEDs permanently red: F2xxx not running
- Both LEDs green 25% / red 75%: F2xxx start-up procedure
- Both LEDs green 50% / red 50%: F2xxx running, but no communication with PCD2.M5_
- Status LED green 75% / red 25%: F2xxx running, Interface still not assigned by the program
- Status LED green 100%: F2xxx running, Interface assigned

Technical data

Communication modes supported:

MC0 Character mode, no automatic handshake
MC1 Character mode with RTS/CTS handshake
MC2 Character mode with Xon/Xoff protocol
MC4 Character mode for RS485 interface
MC5 As MC4 with rapid switching between sending and receiving

SM2 S-Bus master, data mode
SS2 S-Bus slave, data mode

GS2 S-Bus gateway slave, data mode
GM S-Bus gateway master
→ Gateway always via PCD3.

Baud rates supported (bits/sec):

1200, 2400, 4800, 9600, 19200, 38400, 57600, 115200

Current consumption:		+5 V bus	V+
Base module	Port x.1 config.	[I in mA]	[I in mA]
PCD2.F2100	none	110	0
	PCD7.F110	150	0
	PCD7.F121	125	0
	PCD7.F130	190	22
	PCD7.F150	240	0
	PCD7.F180	125	15
PCD2.F2210	none	90	0
	PCD7.F110	130	0
	PCD7.F121	105	0
	PCD7.F130	120	22
	PCD7.F150	225	0
	PCD7.F180	105	15
PCD2.F2810	none	90	15
	PCD7.F110	130	15
	PCD7.F121	105	15
	PCD7.F130	115	15
	PCD7.F150	225	15
	PCD7.F180	105	30

Restrictions:

The PCD2.F2xxx modules for the PCD2.M5_ systems offer the possibility of implementing up to 8 additional serial interfaces. It should be noted that each additional interface adds to the load on the PCD2.M5_ CPU.

The use of these 8 ports is dependent on the type of communication, the baud rate required and the volume of data transferred. Other key factors are:

- Communication on the PCD2.M5_, such as Profi-S-Net, Ether-S-Net, USB
- Use of the web server
- Data transfer from CPU to memory
- User program in the PCD2.M5_

The exact system limits have still to be confirmed.

Block diagram

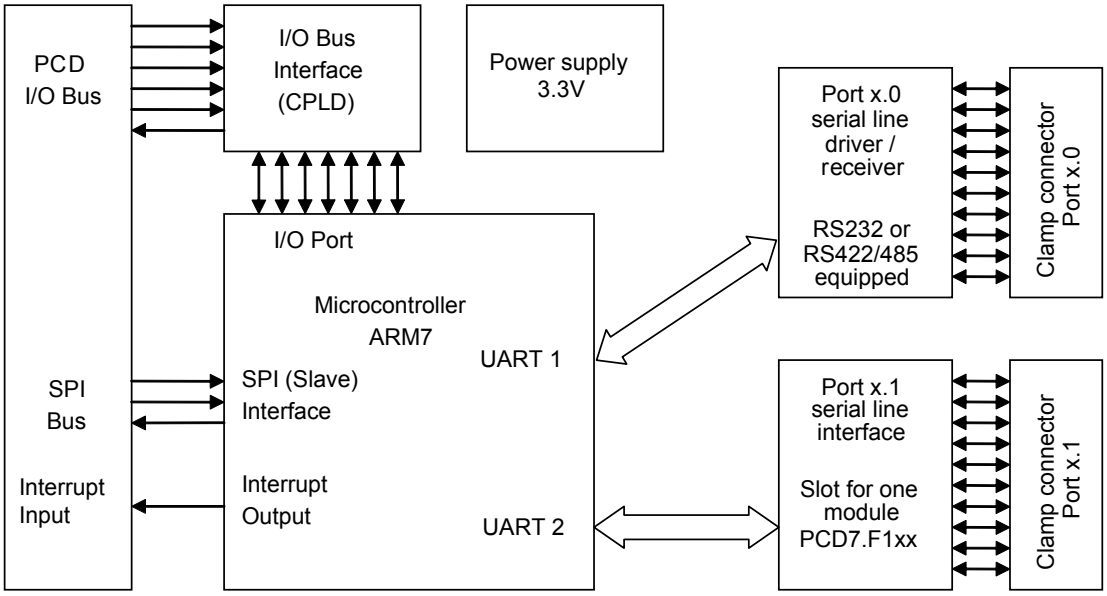

5

5.5.4 Port x.0: RS422 / RS485 on the modul PCD2.F2100

The PCD2.F2100 module contains two different interface types on Port x.0: RS422 with RTS/CTS and RS485 (electrically connected). The line termination is integrated into the module and can be enabled by means of a switch on the module.

RS422 mode

RS422

0	PGND	Tx	1
2	/Tx	Rx	3
4	/Rx	PGND	5
6	RTS	/RTS	7
8	CTS	/CTS	9

10-pole spring terminal block

Line termination in RS422 mode always uses 150 Ω resistor on the PCD2.F2100.

RS485 mode

(Electrically connected RS485 interface)

RS485

0	PGND	Rx-Tx	1
2	/Rx-/Tx		3
4		PGND	5
6			7
8	(SGD)		9

10-pole spring terminal block

Connection:

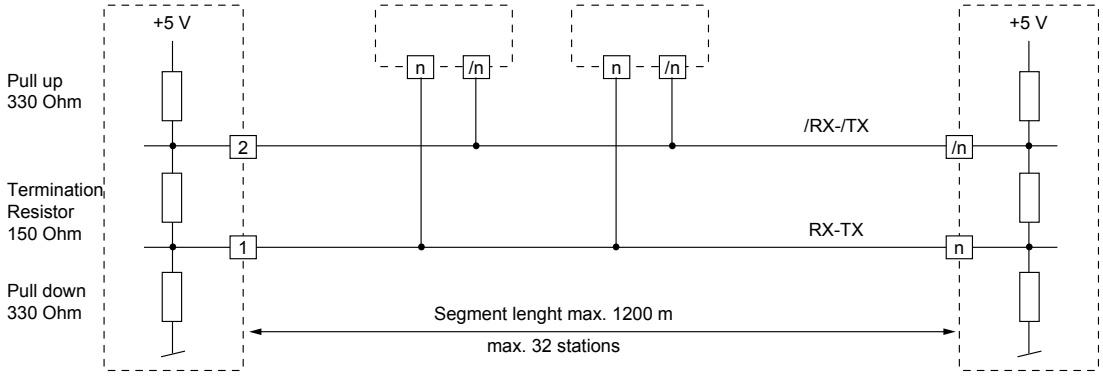

5.5.5 Port x.0: RS232 on the modul PCD2.F2210 (for modem)

The line termination for Port x.0 is integrated into the module and can be enabled by means of a switch on the module. On the base plate next to the switch are the codes 'O' for OPEN and 'C' for CLOSED.

The PCD2.F2210 module offers a complete RS232 interface on Port x.0. This port is intended mainly for modem connections such as RTS/CTS, DTR/DSR and DCD.

RS232 connection

RS232

0	PGND	TxD	1
2	RxD	RTS	3
4	CTS	PGND	5
6	DTR	DSR	7
8	COM	DCD	9

10-pole spring terminal block

RS232 connection to DTE:

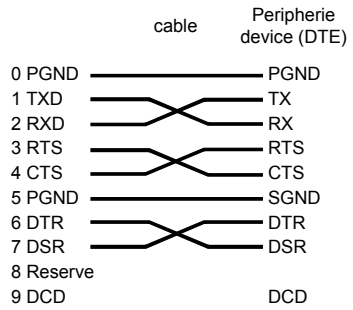

RS232 connection to DCE:

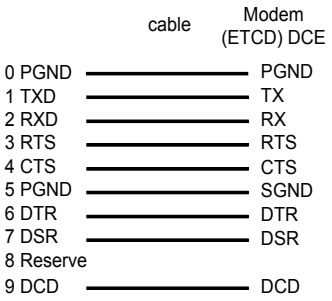

5.5.6 Port x.0: Belimo MP-Bus on module PCD2.F2810

The PCD2.F2810 module offers a complete Belimo MP-Bus interface on Port x.0. An MP-Bus with up to 8 drives and sensors can then be connected to Port x.0.

Belimo connection

Belimo MP bus

0	PGND	MP	1
2	‚MFT'	‚IN'	3
4		PGND	5
6			7
8			9

10-pole spring terminal block

Modem module for I/O module socket

PCD2.T814:
analogue modem 33.6 kbps
(RS232 and TTL interface)

PCD2.T851:
digital modem ISDN-TA
(RS232 and TTL interface)

Recommended slots for connection using ribbon cable:

PCD2.M5_ - Slot #4 (recommended)

If a different socket is chosen for the internal modem, it can no longer be connected via the ribbon cable. The modem is then connected to the PCD7.F121 interface module by spring terminals.

An external modem can also be connected to the PCD7.F121 module.

For physical reasons, PCD2.T8xx modems cannot be connected to the slots highlighted in colour:

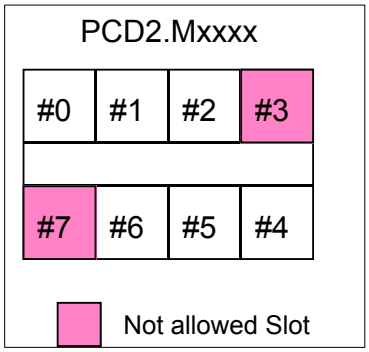

Two modem modules cannot be mounted side-by-side.

For installtion details, see manual 26/771 “PCD2.T8xx modem modules“

Do not use the modem modules on PCD2.C2000/C1000.

5.7 Communication on Slot C

Slot C is intended to take the interface for the CAN-Bus or for Profibus applications.

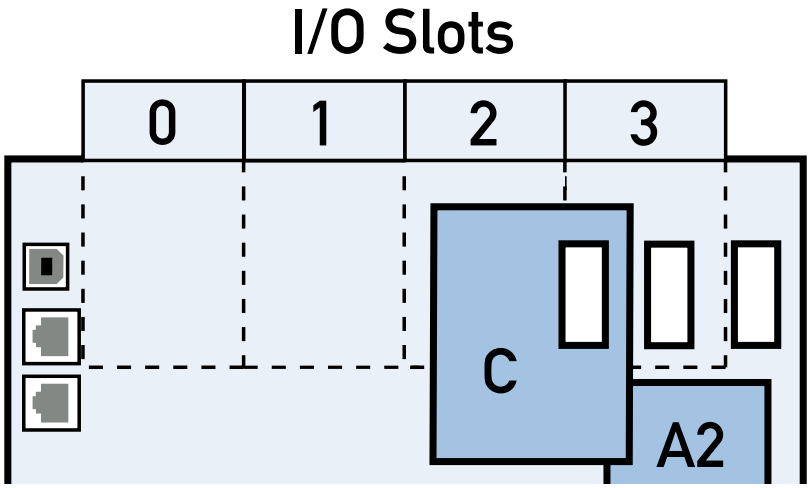

Fitting a circuit board to Slot C

- Remove housing cover (see section 3.5.3)
- Remove supply from the PCD2.M5_
- Remove any cables already plugged in (UBS, Ethernet, Profibus, RS232)
- Remove upper part of housing (see section 3.5.4)
- Before placing a circuit board on Slot C, insert PCD7.F1xx into Slot A2 if required
- First, insert the two spacers on the back of the circuit boards (see Figs. 1 & 2). The rounded ends of the spacers must be inserted into the round holes in the PCD board
- Turn the circuit board and insert into the holes provided in the CPU board Ensure that the plug is correctly positioned in Slot C (Fig. 3)

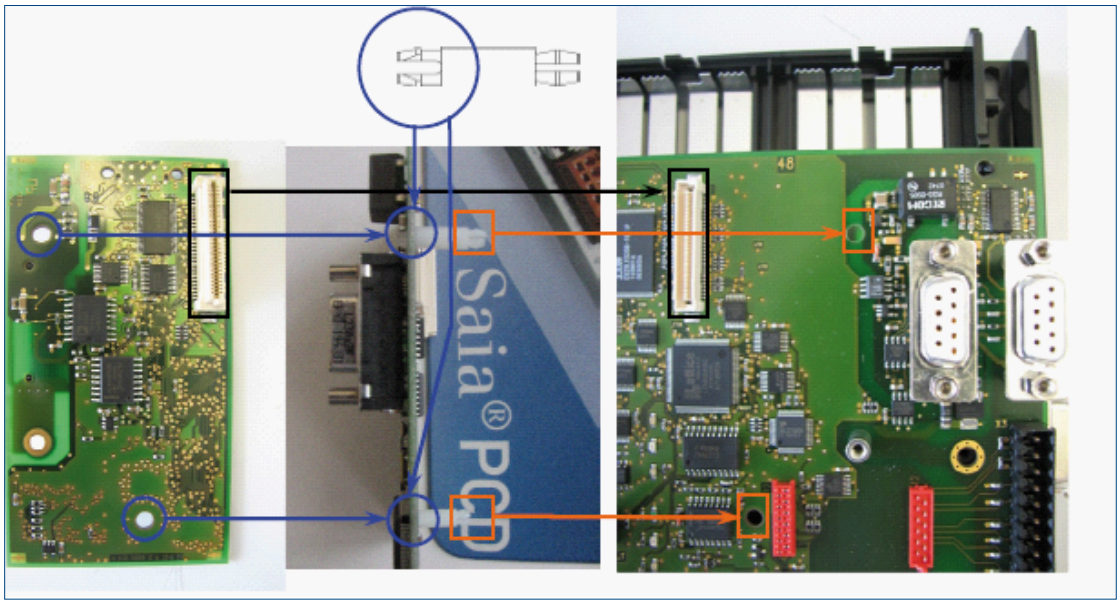

Fig. 1 Fig. 2 Fig. 3

Check that the plug is inserted correctly. Fix the circuit board with the Torx T 10 screw provided sichern.

Remove upper part of housing, section 3.5.4

Push out pre-pressed aperture for the D-Sub socket and replace upper part of housing, section 3.5.4

5

The CAN bus should be connected directly to the PCD7.F7400 module.

PCD2.M5_

PCD7.F7400

PCD7.F7400
to connect the CAN bus, 1 MBit/s

Pin layout, D-Sub 9 pole, CAN Port 10

Socket	**C**
Connection type	D-Sub 9-pole (male)
signal	**Pin no**
	1
CAN_Low	2
GND	3
	4
	5
	6
CAN_High	7
	8
	9

5.7.2 Profibus DP Master, module PCD7.F7500

The Profibus should be connected directly to the PCD7.F7500 module.

PCD2.M5_

PCD7.F7500

PCD7.F7500
for connection as Profibus DP Master (12 MBit/s).

To avoid reflections, each segment must be terminated at the line ends. According to the Profibus standard, this cannot be done on the device. The PCD7.T160 termination boxes or standard 9-pole Profibus DP D-Sub connectors are suitable for this.

Details can be found in manual 26/765 "Profibus DP".

D-Sub 9 pole pin allocation

Socket	**C**
Connection type	D-Sub 9-pole (female)
signal	**Pin no**
RTS/CNTR-P	4
PGND	Threaded bolts
RxD/TxD-N	8 A (green)
RxD/TxD-P	3 B (red)
DP GND	5
DP +5 V	6

6 Input/output (I/O) modules

6.1 Module overview

The summary below shows the available digital and analogue I/O modules, counters etc. for the PCD2 series:

Type	Designation	No. I/Os or mods.	Description	Input/output signal range	Page
Digital input modules					
PCD2.E110	8 I	8	8 inputs 8 ms	24 VDC	6-7
PCD2.E111	8 I	8	8 inputs 0.2 ms	24 VDC	6-7
PCD2.E112	8 I	8	8 inputs 9 ms	12 VDC	6-7
PCD2.E116	8 I	8	8 inputs 0.2 ms	5 VDC	6-7
PCD2.E160	16 I	16	16 inputs 8 ms, connection via 34-pole ribbon connector	24 VDC	6-9
PCD2.E161	16 I	16	16 inputs 0.2 ms, connection via 34-pole ribbon connector	24 VDC	6-9
PCD2.E165	16 I	16	16 inputs 8 ms, spring terminal connection	24 VDC	6-12
PCD2.E166	16 I	16	16 inputs 0.2 ms, spring terminal connection	24 VDC	6-12
Digital input modules, electrically isolated [1])					
PCD2.E500	6 I	6	6 inputs	110…240 VAC	6-15
PCD2.E610	8 I	8	8 inputs 10 ms, electrically isolated	24 VDC	6-17
PCD2.E611	8 I	8	8 inputs 0.2 ms, electrically isolated	24 VDC	6-17
PCD2.E613	8 I	8	8 inputs 9 ms, electrically isolated	48 VDC	6-17
PCD2.E616	8 I	8	8 inputs 0.2 ms, electrically isolated	5 VDC	6-17
Digital output modules					
PCD2.A300	6 O	6	6 outputs 2 A	10…32 VDC	6-20
PCD2.A400	8 O	8	8 outputs 0.5 A	5…32 VDC	6-22
PCD2.A460	16 O	16	16 outputs 0.5 A, connection via 34-pole ribbon connector	10…32 VDC	6-24
PCD2.A465	16 O	16	16 outputs 0.5 A, spring terminal connection	10…32 VDC	6-27
Digital output modules, electrically isolated					
PCD2.A200	4 O	4	4 make contacts 2 A	250 VAC 50 VDC	6-30
PCD2.A210	4 O	4	4 break contacts 2 A	250 VAC 50 VDC	6-32
PCD2.A220	6 O	6	6 make contacts 2 A	250 VAC 50 VDC	6-34
PCD2.A250	8 O	8	8 make contacts 2 A	48 VAC 505-8 VDC	6-36
PCD2.A410	8 O	8	8 outputs 0.5 A, electrically isolated [1])	5…32 VDC	6-38

1) galvanic separation of outputs to PCD, channels themselves not separated

Type	Des-igna-tion	No. I/Os or mods.	Description	Input/ output signal range	Page
Digital combined input/output modules					
PCD2.B100	2 I + 2 O + 4 I/O	8	2 inputs, 2 outputs, 4 selectable as inputs or outputs	24 VDC 5…32 VDC 24 VDC	6-41
Multifunctional I/O modules					
PCD2.G400			10 digital inputs 2 analogue inputs 10 bit 6 analogue inputs 10 bit 8 digital outputs 6 analogue outputs 8 bit	24 VDC 0…10 V Pt/Ni 1000 24 VDC 0…10 VDC	6-45
PCD2.G410			16 digital inputs 4 analogue inputs 10 bit 4 relay outputs 4 analogue outputs 8 bit	24 VDC I/U/T 250 VAC U/I	6-46
Analogue input modules					
PCD2.W200	8 I	8	8 analogue inputs 10 bit	0…10 V	6-49
PCD2.W210	8 I	8	8 analogue inputs 10 bit	0…20 mA	6-49
PCD2.W220	8 I	8	8 analogue inputs 10 bit	Pt/Ni 1000	6-49
PCD2.W220Z02	8 E	8	8 analogue inputs 10 bit	NTC 10	6-49
PCD2.W220Z12	8 E	8	8 analogue inputs 10 bit	4 × 0…10 V 4 × Pt/Ni 1000	6-49
PCD2.W300	8 I	8	8 analogue inputs 12 bit	0…10 V	6-54
PCD2.W310	8 I	8	8 analogue inputs 12 bit	0…20 mA	6-54
PCD2.W340	8 I	8	8 analogue inputs 12 bit, jumper selectable	0…10 V, 0…2,5 V 0…20 mA, Pt/Ni 1000	6-54
PCD2.W350	8 I	8	8 analogue inputs 12 bit	Pt/Ni 100	6-54
PCD2.W360	8 I	8	8 analogue inputs 12 bit, resolution ‹ 0.1 °C	Pt 1000	6-54
Analogue input modules, electrically isolated [1])					
PCD2.W305	7 I	7	7 analogue inputs 12 bit	0…10 V	6-61
PCD2.W315	7 I	7	7 analogue inputs 12 bit	0…20 mA	6-61
PCD2.W325	7 I	7	7 analogue inputs 12 bit	-10…+10 V	6-61

1) galvanic separation of outputs to PCD, channels themselves not separated

Type	Des-igna-tion	No. I/Os or mods.	Description	Input/ output signal range	Page

Analogue output modules

PCD2.W400	4 O	4	4 analogue outputs, 8 bit	0…10 V	6-66
PCD2.W410	4 O	4	4 analogue inputs 8 bit, jumper selectable	0…10 V, 0(4)…20 mA	6-66
PCD2.W600	4 O	4	4 analogue outputs, 12 bit	0…10 V	6-70
PCD2.W610	4 O	4	4 analogue inputs 12 bit, jumper selectable	0…10 V, -10 V..+10 V 0(4)…20 mA, Pt 1000	6-70

Analogue output modules, electrically isolated [1])

PCD2.W605	6 O	6	6 analogue outputs, 10 bit, electr. isol..	0…10 V	6-75
PCD2.W615	4 O	4	4 analogue outputs, 10 bit, electr. isol..	0…20 mA	6-75
PCD2.W625	6 O	6	6 analogue outputs, 10 bit, electr. isol..	-10…+10 V	6-75

Analogue input/output modules, electrically isolated [1])

PCD2.W525	4 I	4	4 analogue inputs 14 bit	0…10 V, 0(4)…20 mA Pt 500 / 1000, Ni 1000	6-80
	+ 2 O		+ 2 analogue outputs, 12 bit	0…10 V, 0(4)…20 mA	

Weighing modules

PCD2.W720	2 I	2	2-channel weighing module for 4/6-wire weighing cells	6-85

General-purpose temperature modules

PCD2.W745	4 I	4	Thermocouple module for J, K… thermocouples [2])	6-86

1) Galvanic separation of outputs to PCD, channels themselves not separated
2) Non-pluggable cage clamp terminals

6

Type	Des-igna-tion	No. I/Os or mods.	Description	Page

Fast counter modules

PCD2.H100		Counter module, 1 counter channel, up to 20 kHz, 2 inputs	6-88
PCD2.H110		General-purpose, 1 counter channel, up to 100 kHz, 2 inputs	6-93

SSI encoder modules

PCD2.H150		SSI interface module	6-96

Motion control modules for stepper motors

PCD2.H210		Motion control module for stepper motors	6-100

Motion control modules for servo drive

PCD2.H310		Motion control module for servo-motors 1-axis encoder 24 VDC	6-104
PCD2.H311		Same as H310, but 1-axis encoder 5 VDC	6-104
PCD2.H320		Motion control module for servo-motors 2-axis encoder 24 VDC	6-108
PCD2.H322		Same as H320, but 1-axis (slave operation)	6-108
PCD2.H325		Motion control module for servo-drives, 2-axis with 5 V encoder and SSI absolute value encoder	6-108
PCD2.H327		Same as H325, but 1-axis (slave operation)	6-108

6.1.1 Power consumption of PCD2 input/output modules

Type PCD2....	Maximum internal current consumption I from +5 V [mA]	Maximum internal current consumption I from V+ [mA]	Maximum external current consumption at 24 V, I [mA]
E11x	24	--	8 I, 6 mA/I
E16x	72	--	16 I, 4 mA/I
E500	1	--	6 I, 10...12 mA/I
E61x	24	--	8 I, 5 mA/I
A200/210	15	--	32 mA [1)]
A220	20	--	48 mA [1)]
A250	25	--	64 mA [1)]
A300	20	--	Load current
A400	25	--	Load current
A410	24	--	Load current
A46x	74	--	Load current
B100	25	--	Load current
W200/210	8	5	--
W220	8	16	--
W300/310	8	5	--
W3x5	60	--	--
W340/360	8	20	--
W350	8	30	--
W4x0	1	30	W410 100 mA[2)]
W525	40	--	Load current
W600	4	20	--
W605/625	110	--	--
W610	110	--	100 mA [2)]
W615	55	--	90 mA
W720	60	100	--
W745	200	--	--
H100/H110	90	--	CCO output: Load current
H150	25	--	Load current
H210	85	--	Load current
H310/H311	140	--	max. 15 mA
H320/H322	230	20	Load current
H325/H327	250	20	Load current

1) Coil resistance of the relay 3 kOhm
2) Basic consumption 20 mA, plus 0...20 mA per output

6.1.2 Capacity of basic units

Unit	internal 5 V-Bus	internal +V-Bus
PCD2.M5xx0	1,400 mA	200 mA

6.2 Digital input modules

PCD2.E110	**8 inputs, 24 VDC, 8 s**
PCD2.E111	**8 inputs, 24 VDC, 0.2 s**
PCD2.E112	**8 inputs, 12 VDC, 9 s**
PCD2.E116	**8 inputs, 5 VDC, 0.2 s**
PCD2.E160	**16 inputs, 24 VDC, 8 s, connection via 34-pole ribbon connector**
PCD2.E161	**16 inputs, 24 VDC, 0.2 s, connection via 34-pole ribbon connector**
PCD2.E165	**16 inputs, 24 VDC, 8 s, spring terminal connection**
PCD2.E166	**16 inputs, 24 VDC, 0.2 s, spring terminal connection**

6

Definition of input signals

for 5 VDC	for 12 VDC	for 24 VDC
PCD2.E116	PCD2.E112	PCD2.E110, PCD2.E111, PCD2.E160…E166
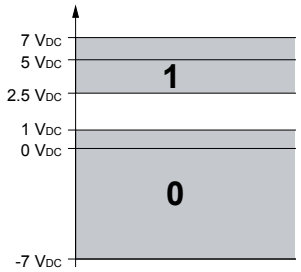	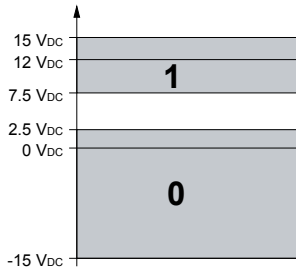	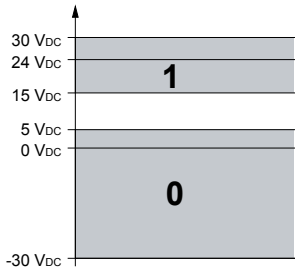

I/O modules and I/O terminal blocks may only be plugged in and removed when the PCD and the external +24 V are disconnected from the power supply.

6.2.1 PCD2.E11x, 8 digital inputs

Application

Low-cost input module for source or sink operation with 8 inputs, electrically connected. Suitable for most electronic and electromechanical switching elements at 24 VDC. The PCD2.E111 differs from the PCD2.E110 in its shorter input delay, typically 0.2 ms.

Technical data

Number of inputs:		8 electrically connected, source or sink operation
Input voltage	E110 :	24 VDC (15…30 VDC) smoothed or pulsed
	E111 :	24 VDC (15…30 VDC) smoothed, max. 10 % residual ripple
	E113 :	12 VDC (7.5…15 VDC) smoothed, max. 10 % residual ripple
	E116 :	5 VDC (1…7 VDC) smoothed, max. 10 % residual ripple
	Special :	other values on request
Input current:		6 mA at 24 VDC
Input delay	E110:	typ. 8 ms
	E111:	typ. 0.2 ms
	E112:	typ. 9 ms
	E116:	typ. 0.2 ms
Resistance to interference: acc. to IEC 801-4		2 kV under capacitive coupling (whole trunk group)
Internal current consumption: (from +5 V bus)		1…24 mA typ. 12 mA
Internal current consumption: (from V+ bus)		0 mA
External current consumption:		max. 48 mA (all inputs = 1) from 24 VDC
Terminals:		Pluggable 10-pole screw terminal block (4 405 4847 0), for wires up to 1.5 mm²

LEDs and connection terminals

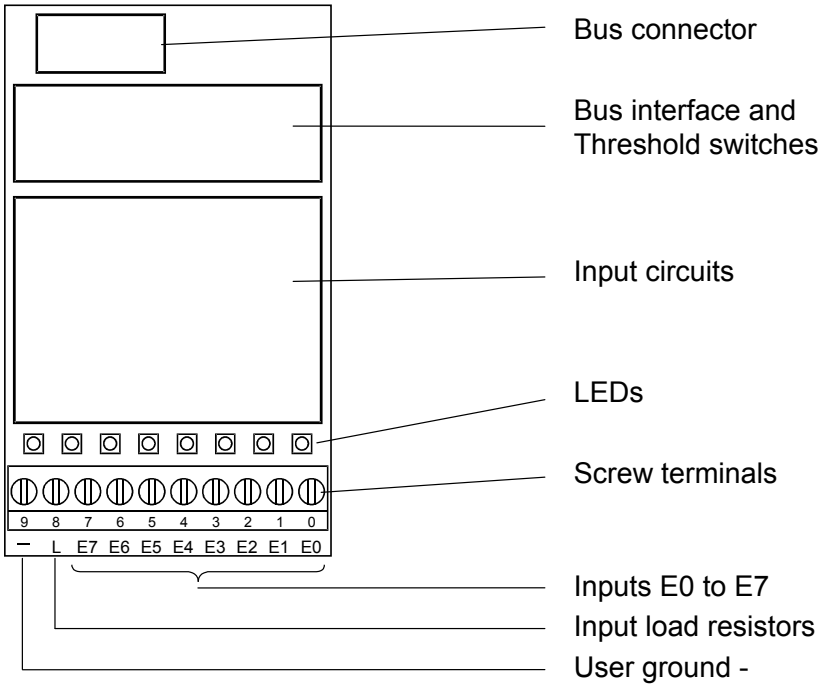

Input circuits and terminal designation

Depending on external wiring, this module may be used for source or sink operation.

Source operation (positive logic):

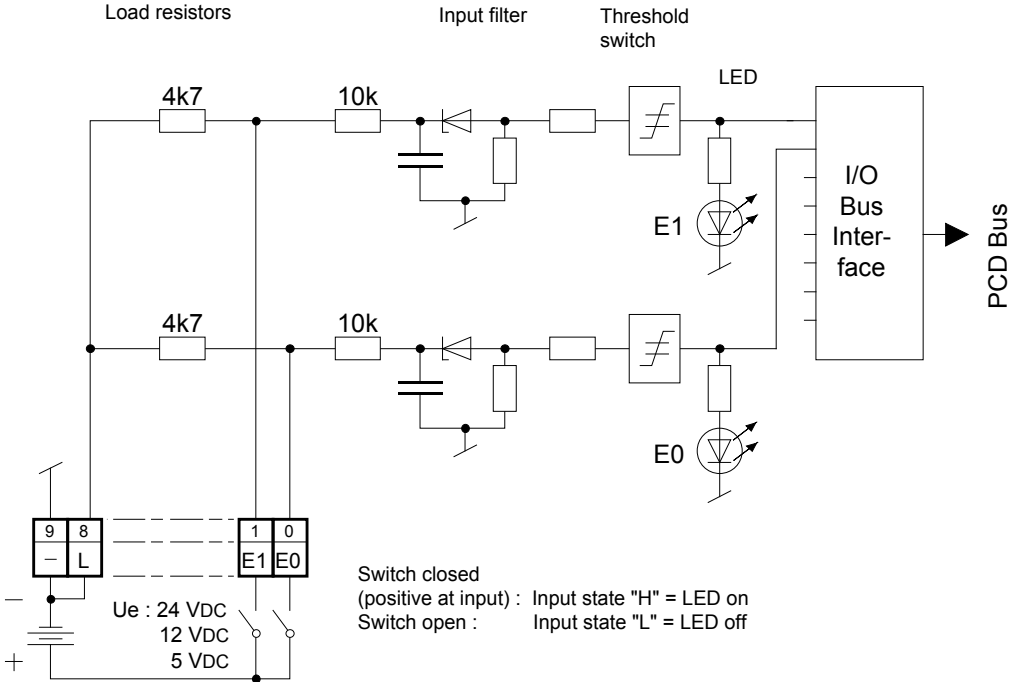

Sink operation (negative logic):

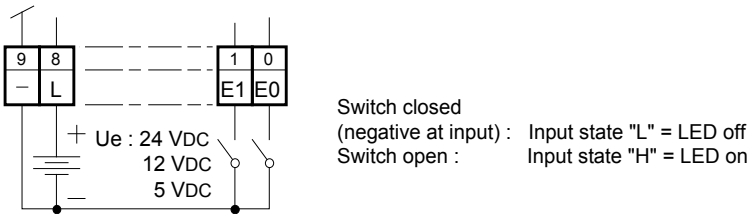

Watchdog: This module can be used on all base addresses; there is no interaction with the watchdog on the CPUs. For details, please refer to the "Watchdog" section, which describes the correct use of the watchdog in conjunction with PCD2 components.

6.2.2 PCD2.E160/161, 16 digital inputs, ribbon cable connector

Application

Low-cost input module for source or sink operation with 16 inputs, electrically connected. Suitable for most electronic and electromechanical switching elements at 24 VDC. The PCD2.E161 differs from the PCD2.E160 in its shorter input delay, typically 0.2 ms.

Technical data

Number of inputs:	16 electrically connected, source or sink operation
Input voltage E160: E161:	24 VDC (15…30 VDC) smoothed or pulsed 24 VDC (15…30 VDC) smoothed max. 10 % residual ripple
Input current:	4 mA per input at 24 VDC
Input delay E160: E161:	typically 8 ms typically 0.2 ms
Resistance to interference: acc. to IEC 1000-4-4	2 kV under capacitive coupling (whole trunk group)
Internal current consumption: (from +5 V bus)	1…72 mA typ. 36 mA
Internal current consumption: (from V+ bus)	0 mA
External current consumption	max. 64 mA (all inputs=1) at 24 VDC
Terminals:	34-pole ribbon cable connector

LEDs and connection terminals

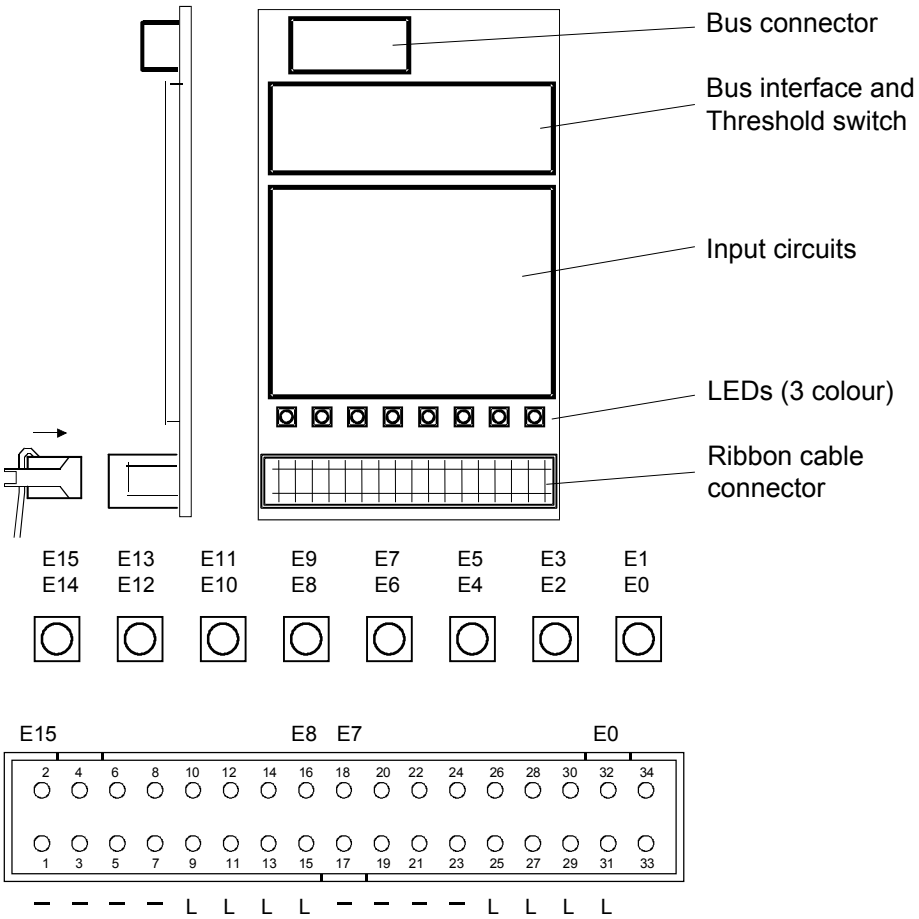

For every 2 inputs, a 3-colour LED is fitted:

LED is	○		○		○		○		○		○		○		○	
	I0	I1	I2	I3	I4	I5	I6	I7	I8	I9	I10	I11	I12	I13	I14	I15
off	0	0	0	0	0	0	0	0	0	0	0	0	0	0	0	0
Red	1	0	1	0	1	0	1	0	1	0	1	0	1	0	1	0
Green	0	1	0	1	0	1	0	1	0	1	0	1	0	1	0	1
Yellow	1	1	1	1	1	1	1	1	1	1	1	1	1	1	1	1

Saia-Burgess Controls provides a wide range of pre-configured cables with a 34-pole ribbon connector at one or both ends.

These connection cables can be plugged at one end into the PCD2.E160 I/O module and at the other end into an I/O terminal adapter.
The following adapters are obtainable from Saia-Burgess Controls: terminal adapters for connecting 3-wire sensors to individual terminals for Signal, Plus and Minus; terminal adapters for connecting 16 I/Os with and without LED and relay interface; and terminal adapters with changeover contacts for signal conversion for digital output modules.

6

Further information can be found in the Manual on *"System cables and connection system"* 26/792.

The following materials can be ordered from ‘3M’:

- Socket connector 34-pole — Type 3414-6600
- (Metal strain relief) *) — Type 3448-2034
- (Handle for socket connector 34-pole) *) — Type 3490-3

Matching cables can be ordered in reels from '3M':

- Ribbon cable 34-pole,
  grey with pin 1 identification — Type 3770/34 or 3801/34
- Round cable 34-pole,
  grey with pin 1 identification — Type 3759/34

*) optional

Input circuits and terminal designation

Depending on external wiring, this module may be used for source or sink operation.

Source operation (positive logic):

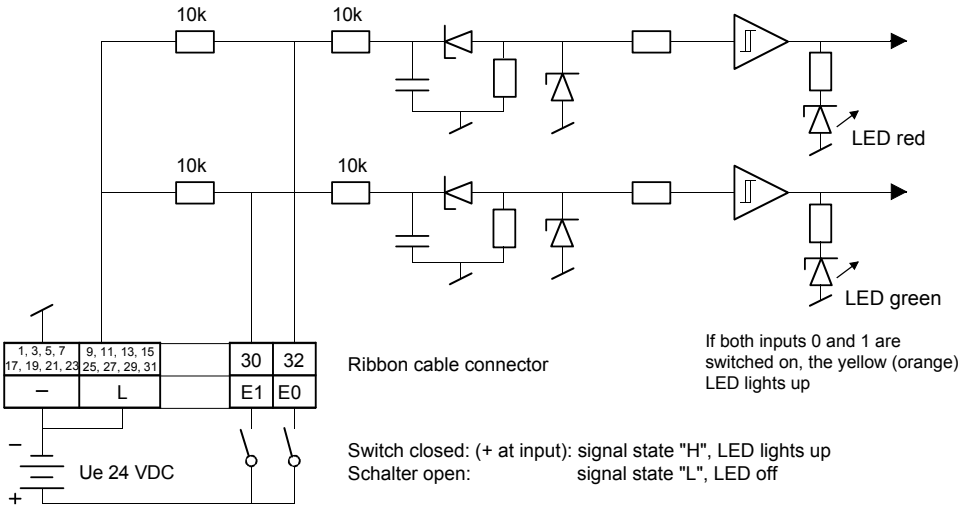

Sink operation (negative logic):

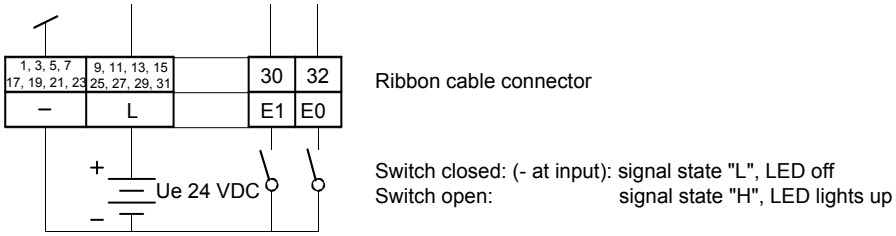

Watchdog: This module can interact with the watchdog, if it is used on base address 240. In this case, the last input with address 255 cannot be used.

For details, please refer to the "Watchdog" section, which describes the correct use of the watchdog in conjunction with PCD2 components.

6.2.3 PCD3.E165/166, 16 digital inputs, cage clamp terminal connectors

Application

Low-cost input module for source or sink operation with 16 inputs, electrically connected. Suitable for most electronic and electromechanical switching elements at 24 VDC. The PCD2.E166 differs from the PCD2.E165 in its shorter input delay, typically 0.2 ms.

Technical data

Number of inputs:	16 electrically connected, source or sink operation
Input voltage E165: E166:	24 VDC (15…30 VDC) smoothed or pulsed 24 VDC (15…30 VDC) smoothed max. 10 % residual ripple
Input current:	4 mA per input at 24 VDC
Input delay E165: E166:	typically 8 ms typically 0.2 ms
Resistance to interference: acc. to IEC 1000-4-4	2 kV under capacitive coupling (whole trunk group)
Internal current consumption: (from +5 V bus)	1…72 mA typ. 36 mA
Internal current consumption: (from V+ bus)	0 mA
External current consumption	max. 64 mA (all inputs=1) at 24 VDC
Terminals:	Spring terminal connection (not pluggable), for wires up to max. 0.5 mm² (1 x AWG 20)

LEDs and connection terminals

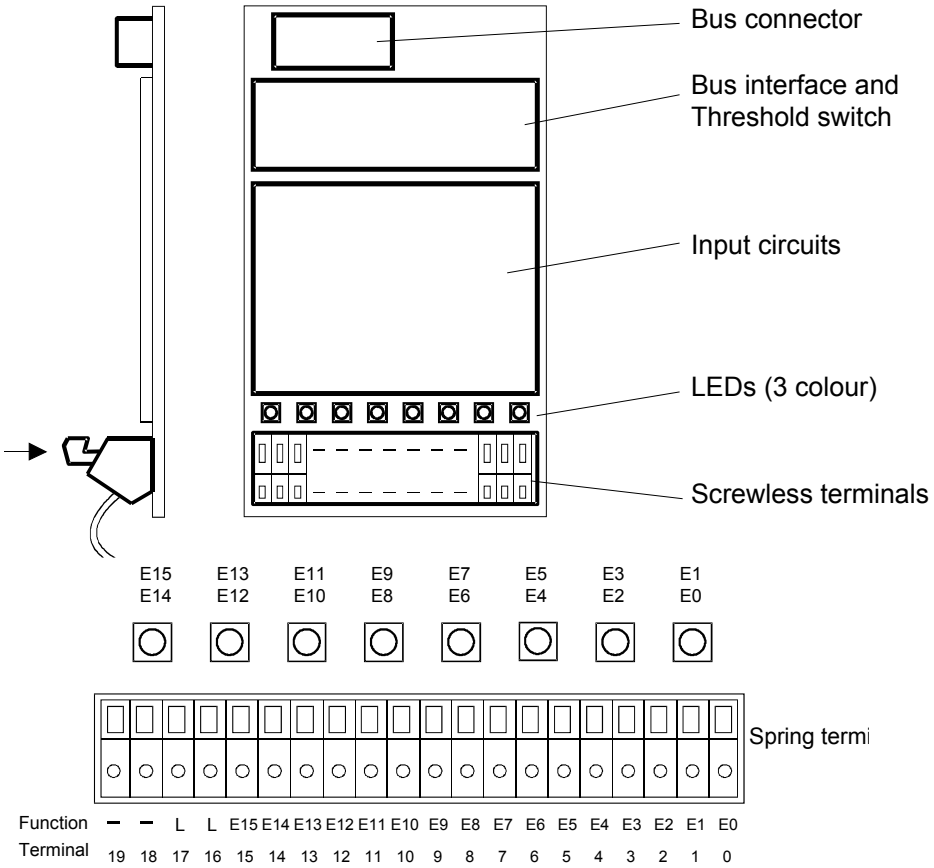

For every 2 inputs, a 3-colour LED is fitted:

LED is																
	I0	I1	I2	I3	I4	I5	I6	I7	I8	I9	I10	I11	I12	I13	I14	I15
off	0	0	0	0	0	0	0	0	0	0	0	0	0	0	0	0
Red	1	0	1	0	1	0	1	0	1	0	1	0	1	0	1	0
Green	0	1	0	1	0	1	0	1	0	1	0	1	0	1	0	1
Yellow	1	1	1	1	1	1	1	1	1	1	1	1	1	1	1	1

Input circuits and terminal designation

Depending on external wiring, this module may be used for source or sink operation.

Source operation (positive logic):

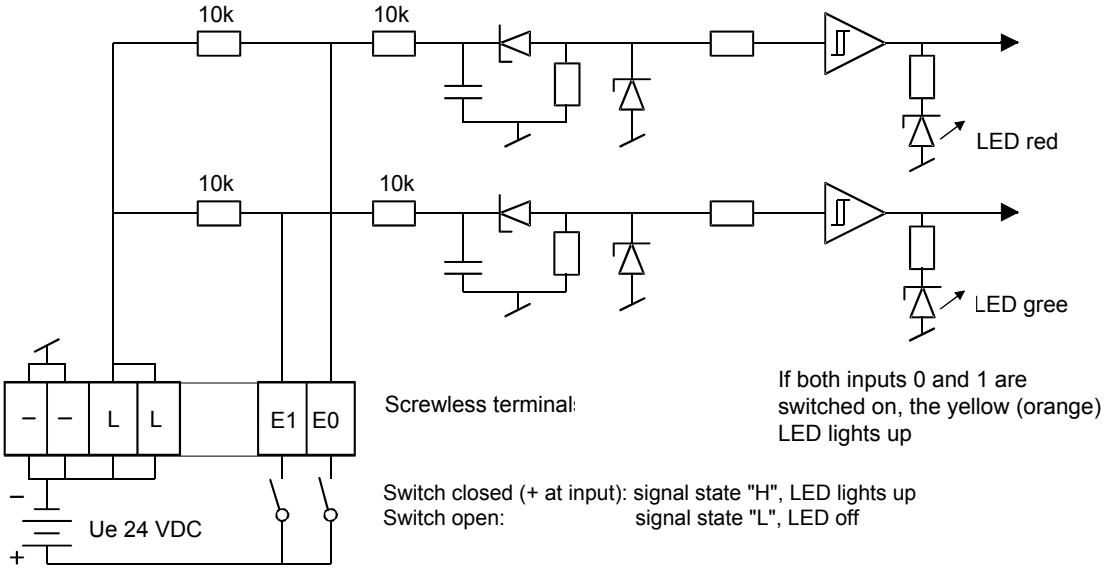

Sink operation (negative logic):

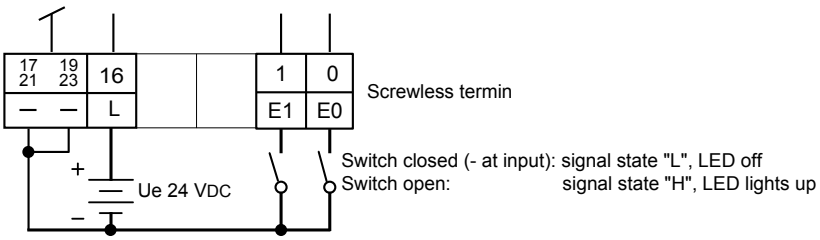

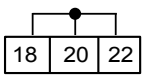

internal connected,
may be used as "distributor",
together max. 500 mA !

Watchdog: This module can interact with the watchdog, if it is used on base address 240. In this case, the last input with address 255 cannot be used.

For details, please refer to the "Watchdog" section, which describes the correct use of the watchdog in conjunction with PCD2 components.

6.3 Digital input modules, electrically isolated

PCD2.E500	**6 inputs for 115 - 230 VAC**
PCD2.E610	**8 inputs 24 VDC, 10 ms**
PCD2.E611	**8 inputs 24 VDC, 0.2 ms**
PCD2.E613	**8 inputs 48 VDC, 9 ms**
PCD2.E616	**8 inputs 5 VDC, 0.2 ms**

Electrical isolation of outputs to the PCD.

The channels are not isolated from each other.

Definition of input signals

for 5 VDC	for 24 VDC	for 48 VDC
PCD2.E616	PCD2.E610, PCD2E611	PCD2.E613

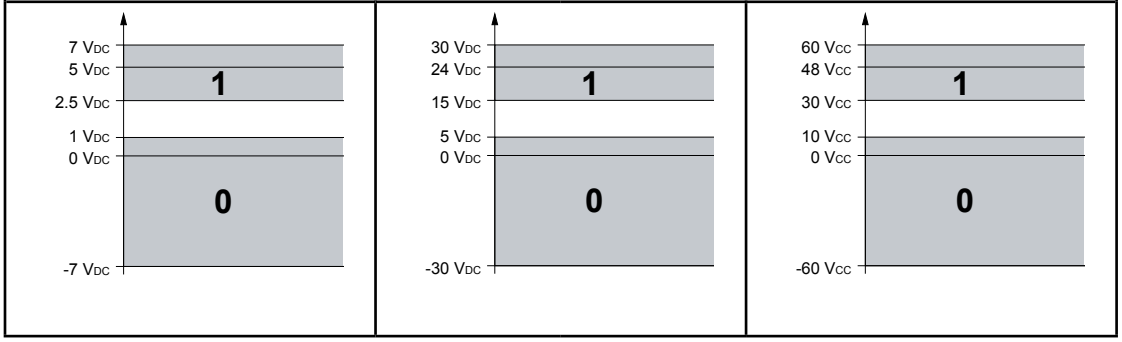

for 115 – 230 VAC
PCD2.E500

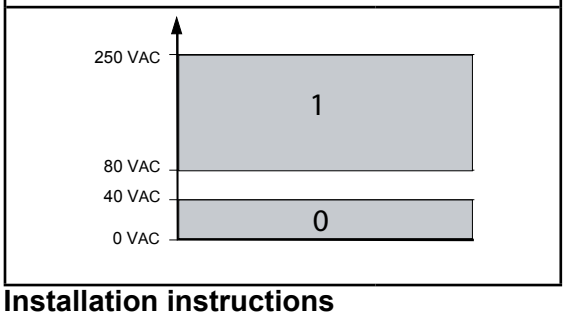

Installation instructions

For reasons of safety it is not permissible to connect low voltages (up to 50V) and higher voltages (50…250 V) to the same module.

If a PCD module is connected to a higher voltage (50…250 V), approved components for this voltage must be used for all elements that are electrically connected to the system.

Using higher voltage (50...250V), all connections to the relay contacts must be connected on the same circuit, i.e. in such a way that they are all protected against one AC phase by one common fuse. Each load circuit may also be protected individually.

I/O modules and I/O terminal blocks may only be plugged in and removed when the PCD and the external +24 V are disconnected from the power supply.

6.3.1 PCD2.E500, 6 digital inputs for 115 - 230 VAC

Application

Module with 6 electrically isolated inputs for alternating current. The inputs are set up for source operation and have one **common "COM" terminal**. Only the positive half-wave of the alternating current is used.

Technical data

Number of inputs	6 electrically isolated from the CPU, source operation, all inputs to the module in the same phase
Input voltage	115/230 V 50/60 Hz, sinusoidal (80 to 250 VAC)
Input current	115 VAC: 5…6 mA (wattless current) 230 VAC: 10…12 mA (wattless current)
Input delay switch-on: switch-off:	 typ. 10 ms; max. 20 ms typ. 20 ms; max. 30 ms
LED	supplied directly from input current
Resistance to interference acc. to IEC 801-4	4 kV under direct coupling 2 kV under capacitive coupling (whole trunk group)
Electrical isolation voltage	2,000 VAC, 1 min.
Electrical isolation resistance	100 MOhm / 500 VDC
Optocoupler isolation voltage	2.5 kV Electrical isolation of outputs to the PCD. The channels are not isolated from each other
Internal current consumption: (from +5 V bus)	< 1 mA
Internal current consumption: (from V+ bus)	0 mA
External current consumption:	
Terminals:	Pluggable 10-pole screw terminal block (4 405 4847 0), for wires up to 1.5 mm²

Switch on/off level:

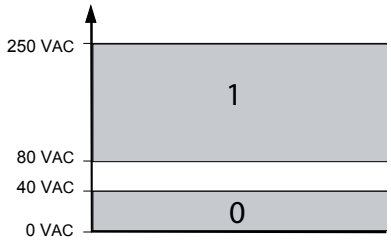

LEDs and connection terminals

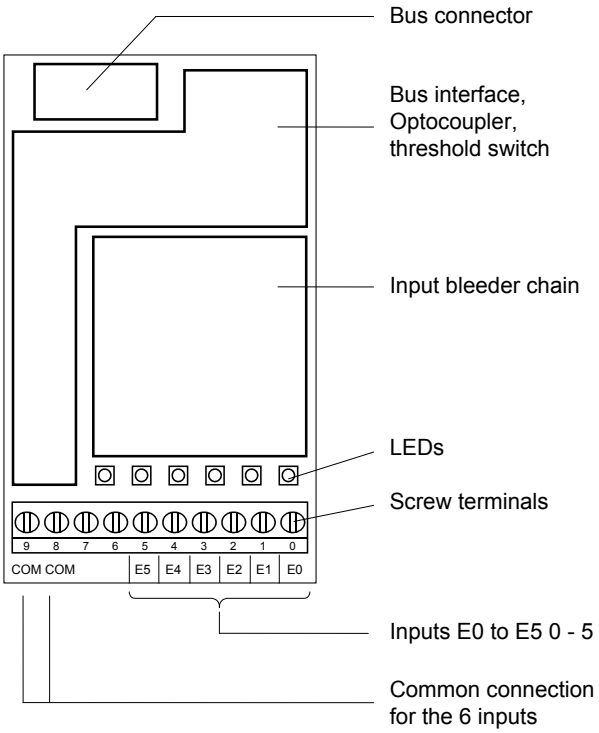

Input circuits and terminal designation

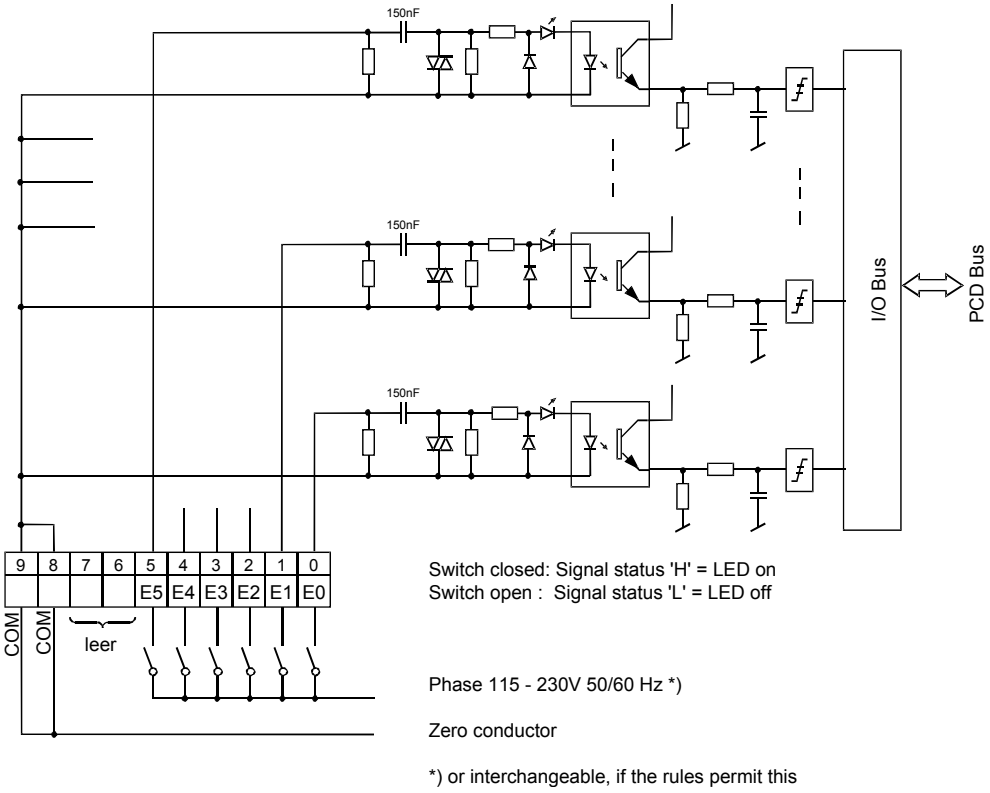

Watchdog: This module can be used on all base addresses; there is no interaction with the watchdog on the CPUs. For details, please refer to the "Watchdog" section, which describes the correct use of the watchdog in conjunction with PCD2 components.

6.3.2 PCD3.E61x, 8 digital inputs, electrically isolated

Application

Input module for source or sink operation with 8 inputs, electrically isolated by optocoupler. Suitable for most electronic and electromechanical switching elements at 24 VDC. The PCD2.E611 differs from the PCD2.E610 in its shorter input delay, typically 0.2 ms.

Technical data

Number of inputs:	8 electrically isolated by optocoupler, source or sink operation, all inputs to the model in the same phase
Input voltage E610: E611: E613: E616:	24 VDC (15…30 VDC) smoothed or pulsed 24 VDC (15…30 VDC) smoothed max. 10 % residual ripple 48 VDC (30…60 VDC) smoothed max. 10 % residual ripple 5 VDC (7.5…15 VDC) smoothed max. 10 % residual ripple
Supply voltage: for source operation: for sink operation:	E610: E611: E613: E616: min. 15 V 15 V 30 V 3 V min. 18 V 18 V 36 V 3.6 V
Input current: (at input voltage) for source operation: for sink operation:	E610: E611: E613: E616: (24 VDC) (24 VDC) (48 VDC) (5 VDC) 5 mA 5 mA 2 mA 8.4 mA 3.7 mA 3.7 mA 1.5 mA 6.2mA
Input delay (0-1/1-0):	E610: E611: E613: E616: incl. 10 ms 0.2 ms 9 ms 0.2 ms excl. 10 ms 1.0 ms 9 ms 1.0 ms
Resistance to interference: acc. to IEC 801-4	4 kV under direct coupling 2 kV under capacitive coupling (whole trunk group)
Electrical isolation voltage: Optocoupler isolation voltage:	1000 VAC, 1 min. 2.5 kV Electrical isolation of outputs to the PCD. The channels are not isolated from each other
Internal current consumption: (from +5 V bus)	1…24 mA typ. 12 mA
Internal current consumption: (from V+ bus)	0 mA
External current consumption:	max. 40 mA (all inputs=1) at 24 VDC, (source operation), max. 18 mA (sink operation)
Terminals:	Pluggable 10-pole spring terminal block (4 405 4847 0), for wires up to 1.5 mm²

LEDs and connection terminals

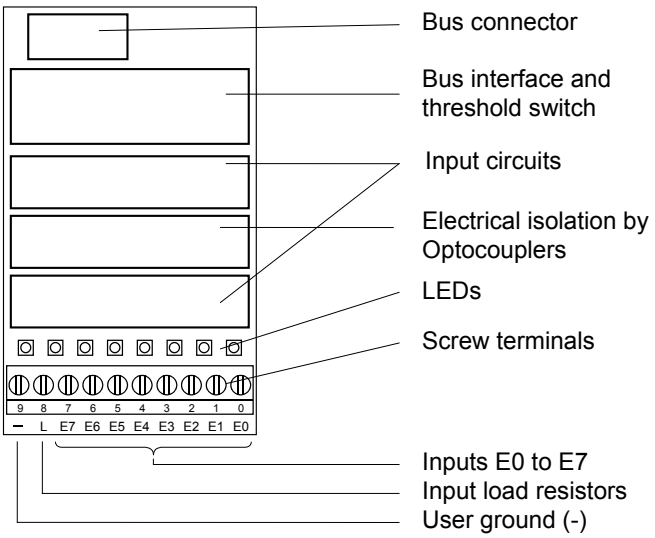

Input circuits and terminal designation

Depending on external wiring, this module may be used for source or sink operation.

Source operation (positive logic):

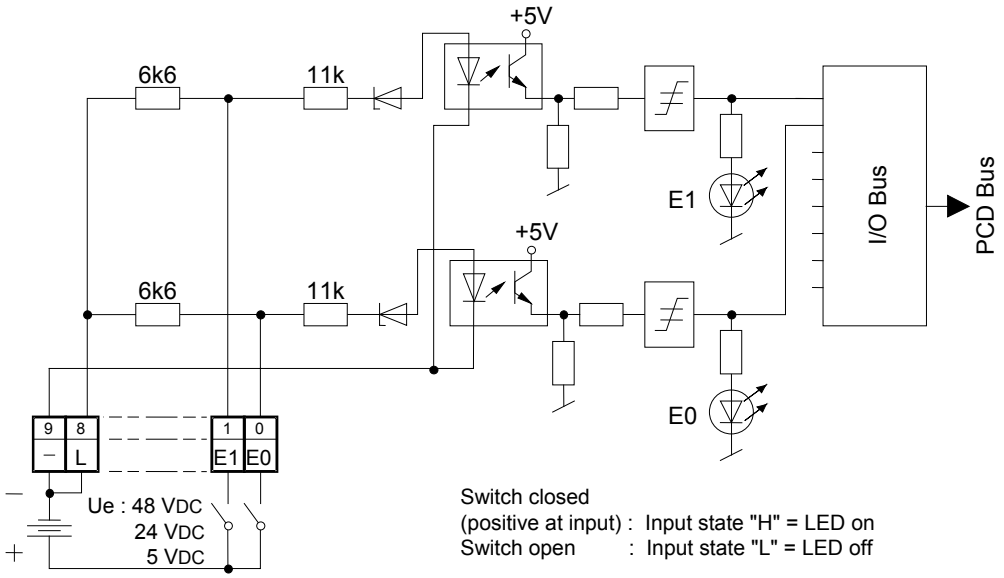

Sink operation (negative logic):

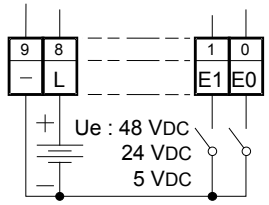

Switch closed
(negative at input) : Input state "H" = LED off
Switch open : Input state "L" = LED on

Watchdog: This module can be used on all base addresses; there is no interaction with the watchdog on the CPUs. For details, please refer to the "Watchdog" section, which describes the correct use of the watchdog in conjunction with PCD2 components.

6.4 Digital output modules

PCD2.A300	**6 outputs 2 A, 10…32 VDC**
PCD2.A400	**8 outputs 0.5 A, 10…32 VDC**
PCD2.A460	**16 outputs 0.5 A, 10…32 VDC**
PCD2.A465	**16 outputs 0.5 A, 10…32 VDC**

! I/O modules and I/O terminal blocks may only be plugged in and removed when the PCD and the external +24 V are disconnected from the power supply.

6.4.1 PCD2.A300, 6 digital outputs for 2 A each

Application

Low cost output module with 6 transistor outputs 5 mA…2 A, without short-circuit protection. The individual circuits are electrically connected; the voltage range is 10…32 VDC.

Technical data

Number of outputs:	6, electrically connected
Output current:	5 mA…2 A (leakage current max. 0.1 mA)
Total current per module:	6 × 2 A = 12 A at 100 % ED
Operating mode:	Source operation (positive switching)
Voltage range:	10…32 VDC, smoothed 10…25 VDC, pulsed
Voltage drop:	0.2 V at 2 A
Output delay:	Switch-on delay <1 µs Switch-off delay <200 µs with inductive loads the delay is longer, because of the protective diode.
Isolation voltage:	1000 VAC, 1 min.
Resistance to interference: acc. to IEC 801-4	4 kV under direct coupling 2 kV under capacitive coupling (whole trunk group)
Internal current consumption: (from +5 V bus)	1…20 mA typ. 12 mA
Internal current consumption: (from V+ bus)	0 mA
External current consumption:	Load current
Terminals:	Pluggable 10-pole screw terminal block (4 405 4847 0), for wires up to 1.5 mm²

LEDs and connection terminals

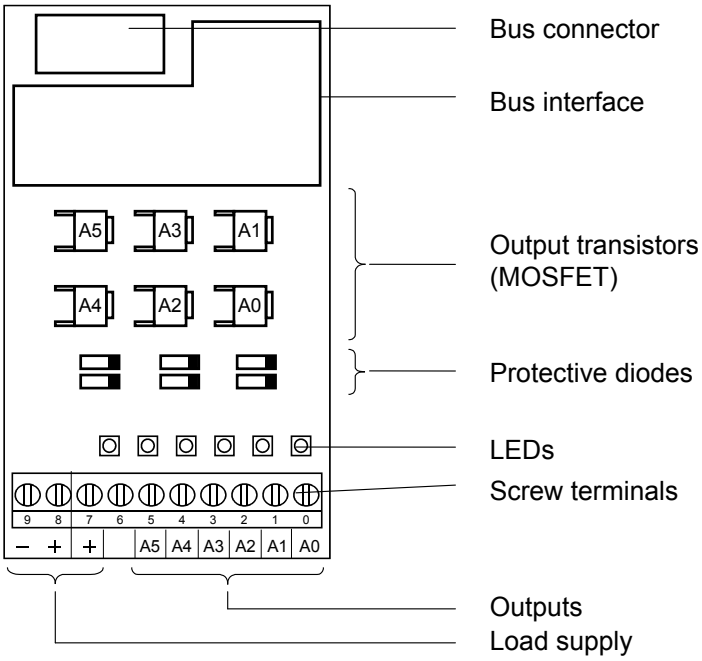

Output circuits and terminal designation

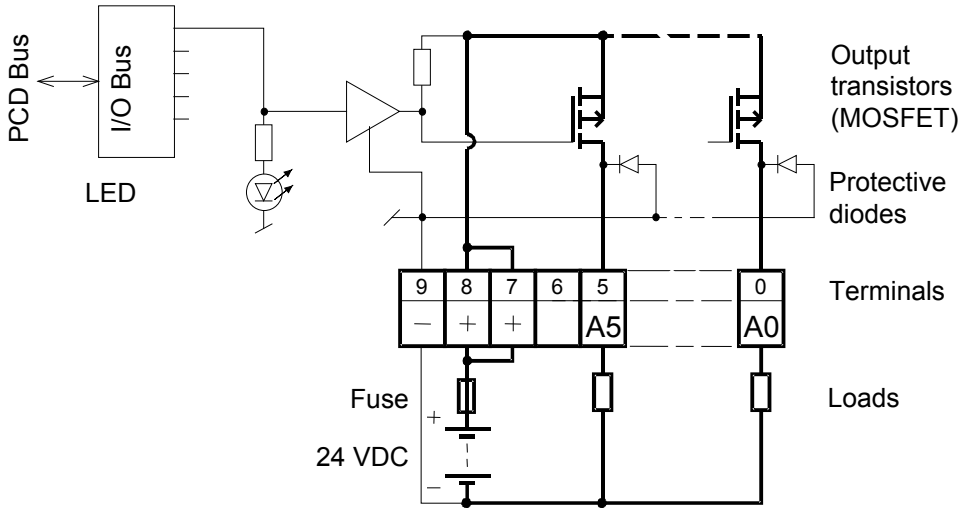

Output conducting (set): LED on
Output disconnected (reset): LED off

Fuse: It is recommended that each module should be separately protected with a fast-blow (S) fuse of max. 12.5 A.

Watchdog: This module can be used on all base addresses; there is no interaction with the watchdog on the CPUs. For details, please refer to the "Watchdog" section, which describes the correct use of the watchdog in conjunction with PCD2 components.

6.4.2 PCD2.A400, 8 digital outputs for 0.5 A each

Application

Low cost output module with 8 transistor outputs 5...500 mA, without short circuit protection. The individual circuits are electrically connected; the voltage range is 5…32 VDC.

Technical data (for version “B”)*

Number of outputs:	8, electrically connected
Output current:	5In the voltage range 5…24 VDC, the load resistance should not be less than 48 Ω
Total current per module:	4 A on 100% duty cycle
Operating mode:	Source operation (positive switching)
Voltage range:	5…32 VDC, smoothed 10…25 VDC, pulsed
Voltage drop:	≤ 0.4 V at 0.5 A
Output delay:	Switch-on delay typ. 10 µs Switch-off delay typically 50 µs(ohmic load 5..500 mA), longer with inductive load, because of the protective diode.
Resistance to interference: acc. to IEC 801-4	4 kV under direct coupling 2 kV under capacitive coupling (whole trunk group)
Internal current consumption: (from +5 V bus)	1…25 mA typ. 15 mA
Internal current consumption: (from V+ bus)	0 mA
External current consumption:	Load current
Terminals:	Pluggable 10-pole screw terminal block (4 405 4847 0), for wires up to 1.5 mm²

* Version “B” since February 1995

(Version “A” was fitted with bipolar transistors. These had a shorter recovery time, but also a higher residual voltage, resulting in a restriction on 100% loading)

LEDs and connection terminals

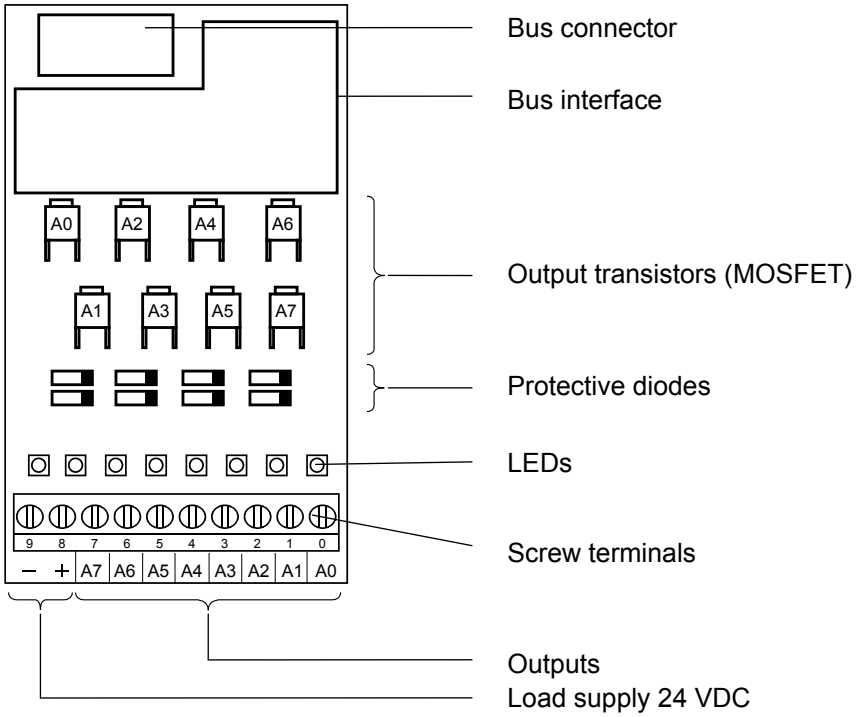

Output circuits and terminal designation

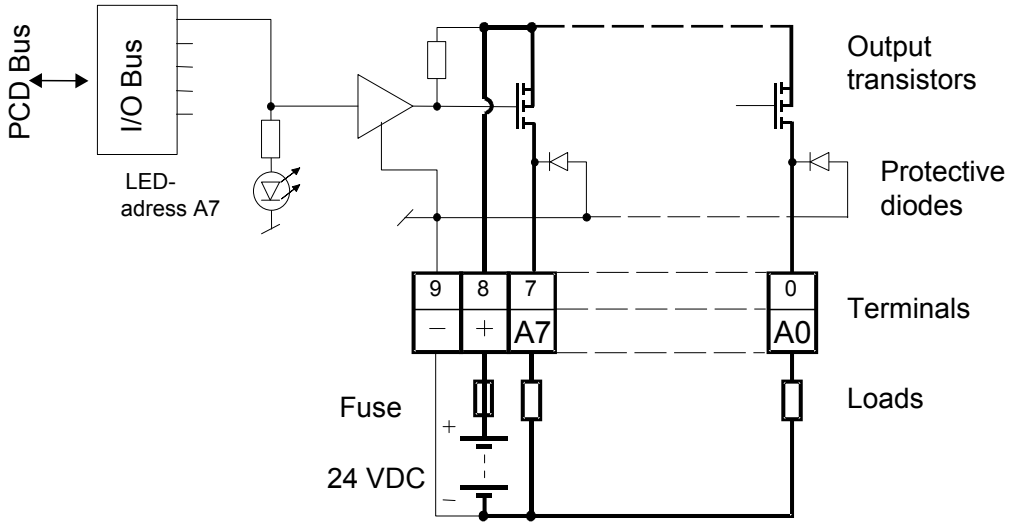

Output conducting (set): LED on
Output disconnected (reset): LED off

Fuse: It is recommended that each module should be separately protected with a fast-blow (S) 4 A fuse

Watchdog: This module can be used on all base addresses; there is no interaction with the watchdog on the CPUs. For details, please refer to the "Watchdog" section, which describes the correct use of the watchdog in conjunction with PCD2 components.

6.4.3 PCD2.A460, 16 digital outputs for 0.5 A each, with ribbon connector

Application

Low cost output module with 16 transistor outputs 5..500 mA, with short-circuit protection. The individual circuits are electrically connected; the voltage range is 10…32 VDC.

Technical data

Number of outputs:	16, electrically connected
Output current:	5In the voltage range 5…24 VDC, the load resistance should not be less than 48 Ω
Short circuit protection	yes
Total current per module:	8 A on 100% duty cycle
Operating mode:	Source operation (positive switching)
Voltage range:	10…32 VDC smoothed, max. 10 % ripple
Voltage drop:	max. 0.3 V at 0.5 A
Output delay:	typically 50 µs, max. 100 µs for resistive load
Resistance to interference: acc. to IEC 801-4	4 kV under direct coupling 2 kV under capacitive coupling (whole trunk group)
Internal current consumption: (from +5 V bus)	max 74 mA (all outputs = "1") typically 40 mA
Internal current consumption: (from V+ bus)	0 mA
External current consumption:	Load current
Terminals:	34-pole ribbon cable connector

LEDs and connection terminals

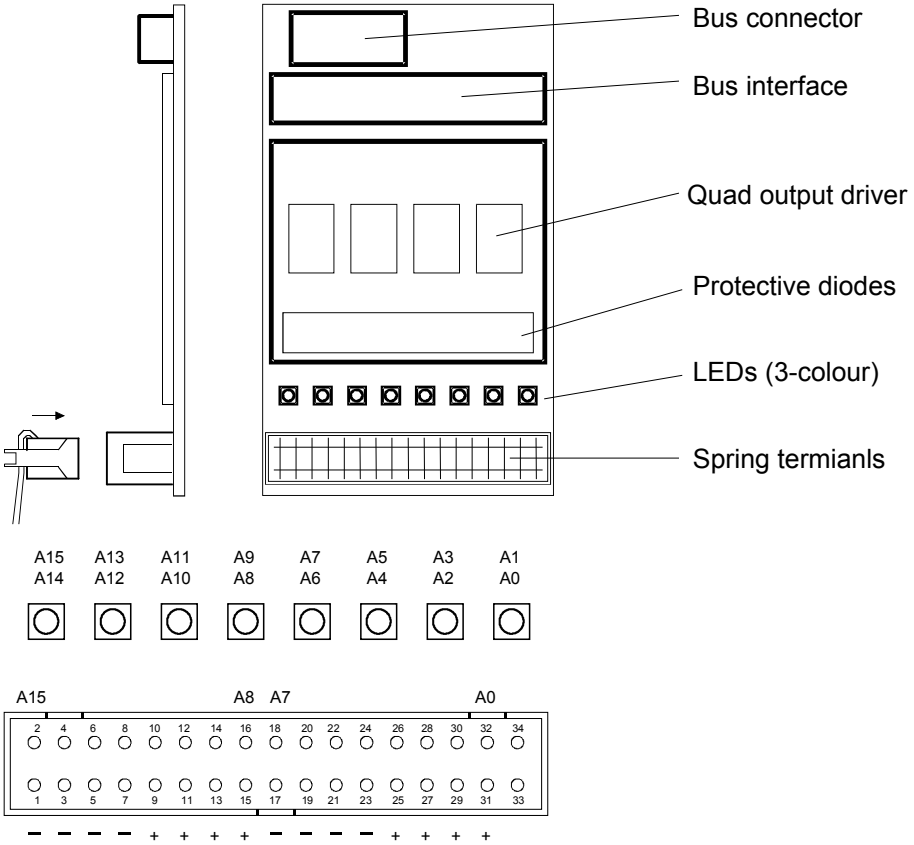

For every 2 outputs, a 3-colour LED is fitted:

LED is																		
	O0	O1	O2	O3	O4	O5	O6	O7	O8	O9	O10	O11	O12	O13	O14	O15
off	0	0	0	0	0	0	0	0	0	0	0	0	0	0	0	0
Red	1	0	1	0	1	0	1	0	1	0	1	0	1	0	1	0
Green	0	1	0	1	0	1	0	1	0	1	0	1	0	1	0	1
Yellow	1	1	1	1	1	1	1	1	1	1	1	1	1	1	1	1

Saia-Burgess Controls provides a wide range of pre-configured cables with a 34-pole ribbon connector at one or both ends.

These connection cables can be plugged at one end into the PCD2.E460 I/O module and at the other end into an I/O terminal adapter.
The following adapters are obtainable from Saia-Burgess Controls: terminal adapters for connecting 3-wire sensors to individual terminals for Signal, Plus and Minus; terminal adapters for connecting 16 I/Os with and without LED and relay interface; and terminal adapters with changeover contacts for signal conversion for digital output modules.

6

Further information can be found in the Manual on *"System cables and connection system"* 26/792.

The following materials can be ordered from ‘3M’:

- Socket connector 34-pole — Type 3414-6600
- (Metal strain relief) *) — Type 3448-2034
- (Handle for socket connector 34-pole) *) — Type 3490-3

Matching cables can be ordered in reels from '3M':

- Ribbon cable 34-pole, grey with pin 1 identification — Type 3770/34 or 3801/34
- Round cable 34-pole, grey with pin 1 identification — Type 3759/34

*) optional

Output circuits and terminal designation

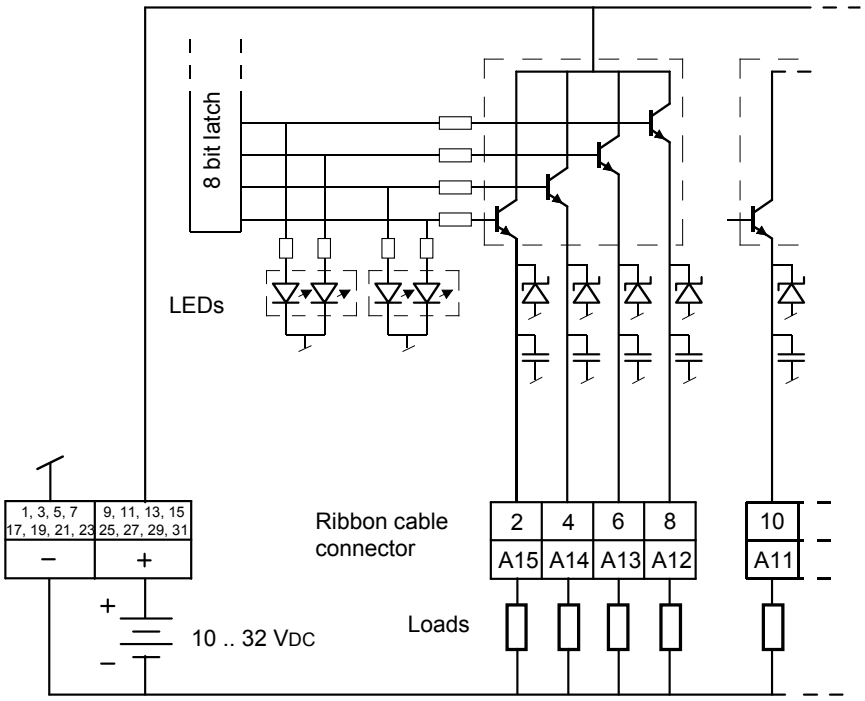

Watchdog: This module can interact with the watchdog, if it is used on base address 240. In this case, the last input with address 255 cannot be used.

For details, please refer to the "Watchdog" section, which describes the correct use of the watchdog in conjunction with PCD2 components.

6.4.4 PCD2.A465, 16 digital outputs for 0.5 A each

Application

Low cost output module with 16 transistor outputs 5..500 mA, with short-circuit protection. The individual circuits are electrically connected; the voltage range is 10…32 VDC.

Technical data

Number of outputs:	16, electrically connected
Output current:	5In the voltage range 10…24 VDC, the load resistance should not be less than 48 Ω
Short circuit protection	yes
Total current per module:	8 A on 100% duty cycle
Operating mode:	Source operation (positive switching)
Voltage range:	10…32 VDC smoothed, max. 10 % ripple
Voltage drop:	max. 0.3 V at 0.5 A
Output delay:	typically 50 µs, max. 100 µs for resistive load
Resistance to interference: acc. to IEC 801-4	4 kV under direct coupling 2 kV under capacitive coupling (whole trunk group)
Internal current consumption: (from +5 V bus)	max 74 mA (all outputs = "1") typically 40 mA
Internal current consumption: (from V+ bus)	0 mA
External current consumption:	Load current
Terminals:	Spring terminal connection (not pluggable), for wires up to max. 0.5 mm² (1 x AWG 20)

LEDs and connection terminals

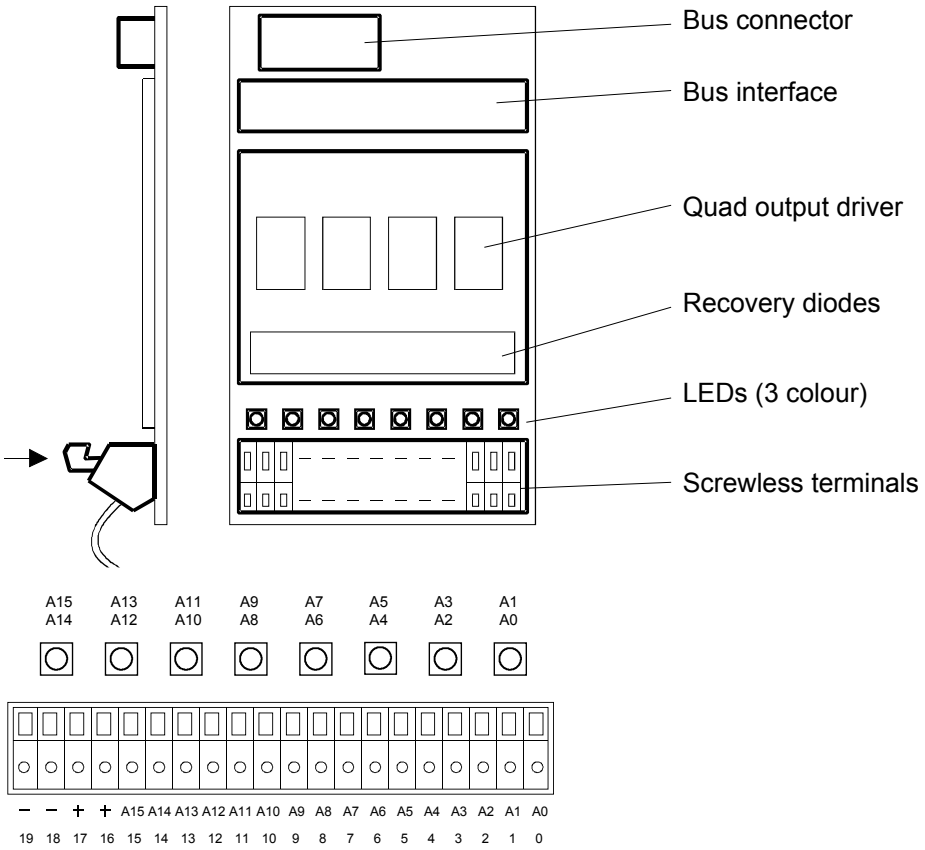

For every 2 outputs, a 3-colour LED is fitted:

LED is																				
	O0	O1	O2	O3	O4	O5	O6	O7	O8	O9	O10	O11	O12	O13	O14	O15
off	0	0	0	0	0	0	0	0	0	0	0	0	0	0	0	0
Red	1	0	1	0	1	0	1	0	1	0	1	0	1	0	1	0
Green	0	1	0	1	0	1	0	1	0	1	0	1	0	1	0	1
Yellow	1	1	1	1	1	1	1	1	1	1	1	1	1	1	1	1

Output circuits and terminal designation

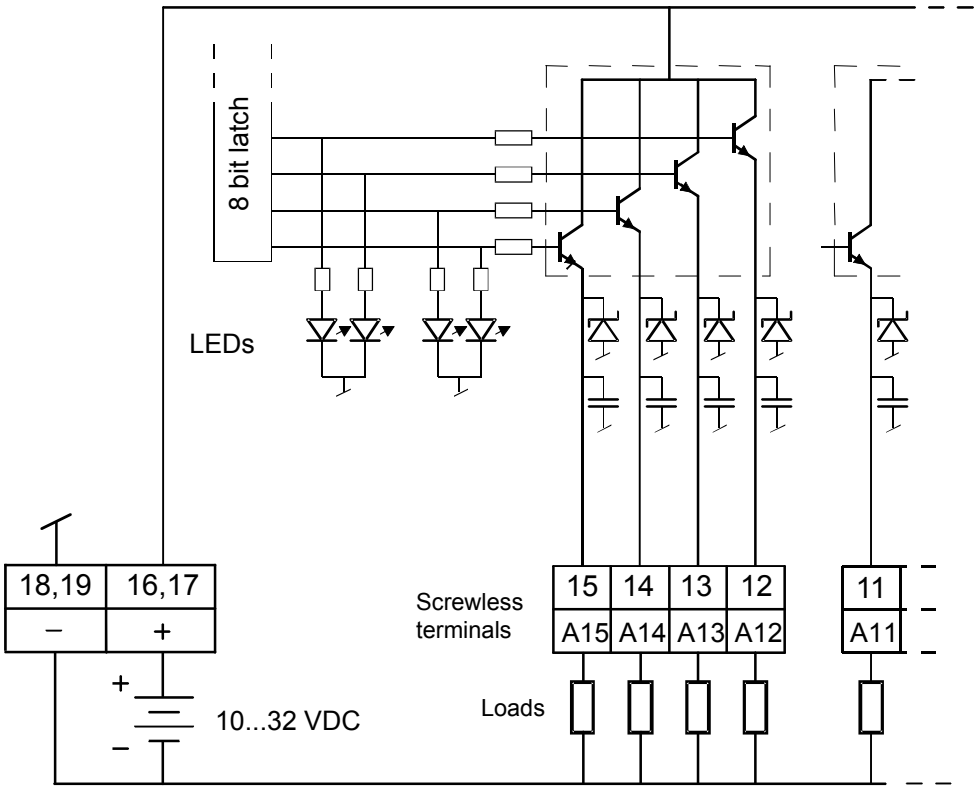

Watchdog: This module can interact with the watchdog, if it is used on base address 240. In this case, the last input with address 255 cannot be used.

For details, please refer to the "Watchdog" section, which describes the correct use of the watchdog in conjunction with PCD2 components.

6.5 Digital output modules, electrically isolated

PCD2.A200	**4 make contacts 2 A, 250 VAC | 50 VDC**
PCD2.A210	**4 break contacts 2 A, 250 VAC | 50 VDC**
PCD2.A220	**6 make contacts 2 A, 250 VAC | 50 VDC**
PCD2.A250	**8 make contacts 2 A, 48 VAC | 50 VDC** **pluggable 14-pole terminal block**
PCD2.A410	**8 outputs 0.5 A, 5…32 VDC,** **electrically isolated from PCD2 bus**

Installation instructions

For reasons of safety it is not permissible to connect low voltages (up to 50V) and higher voltages (50…250 V) to the same module.

If a PCD module is connected to a higher voltage (50…250 V), approved components for this voltage must be used for all elements that are electrically connected to the system.

Using higher voltage (50...250V), all connections to the relay contacts must be connected on the same circuit, i.e. in such a way that they are all protected against one AC phase by one common fuse. Each load circuit may also be protected individually.

6

I/O modules and I/O terminal blocks may only be plugged in and removed when the PCD and the external +24 V are disconnected from the power supply.

The Annex, Section A.4 "Relay contacts" contains measurement details and suggested wiring for the relay contacts. For safe switching and a long service life, these figures must be observed.

6.5.1 PCD2.A200, 4 relays with make contacts, with contact protection

Application

The module contains 4 relays with normally-open contacts for direct or alternating current up to 2 A, 250 VAC. The contacts are protected by a varistor and an RC element. The module is especially suited wherever perfectly isolated AC switching circuits with infrequent switching have to be controlled.

Technical data

Number of outputs:	4, electrically isolated make contacts
Type of relay (typical):	RE 030024, SCHRACK
Switching capacity: (contact lifetime)	2 A, 250 VAC AC1 0.7 x 10^6 operations 1 A, 250 VAC AC11 1.0 x 10^6 operations 2 A, 50 VDC DC1 0.3 x 10^6 operations [3] 1 A, 24 VDC DC11 0.1 x 10^6 operations [1][3]
Relay coil supply: [2]	nominal 24 VDC smoothed or pulsed, 8 mA per relay coil
Voltage tolerance, dependent on ambient temperature:	20 °C: 17.0…35 VDC 30 °C: 19.5…35 VDC 40 °C: 20.5…32 VDC 50 °C: 21.5... 30 VDC
Output delay:	typically 5 ms at 24 VDC
Resistance to interference: acc. to IEC 801-4	4 kV under direct coupling 2 kV under capacitive coupling (whole trunk group)
Internal current consumption: (from +5 V bus)	1…15 mA typ. 10 mA
Internal current consumption: (from V+ bus)	0 mA
External current consumption:	max. 32 mA
Terminals:	Pluggable 10-pole screw terminal block (4 405 4847 0), for wires up to 1.5 mm²
[1] With external protective diode [2] With reverse voltage protection [3] These ratings are not UL-listed	

The Annex, Section A.4 "Relay contacts" contains measurement details and suggested wiring for the relay contacts. For safe switching and a long service life, these figures must be observed.

LEDs and connection terminals

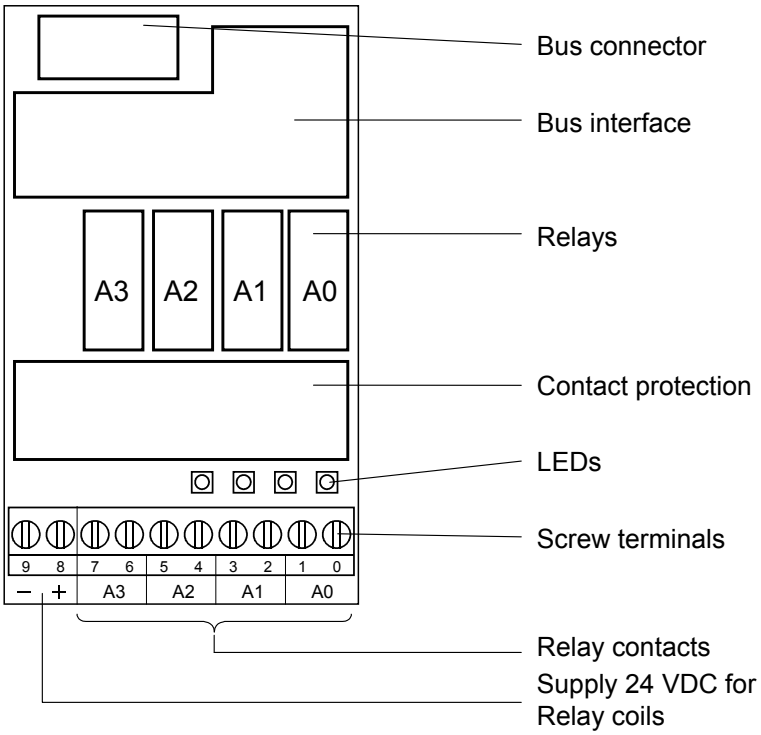

Output circuits and terminal designation

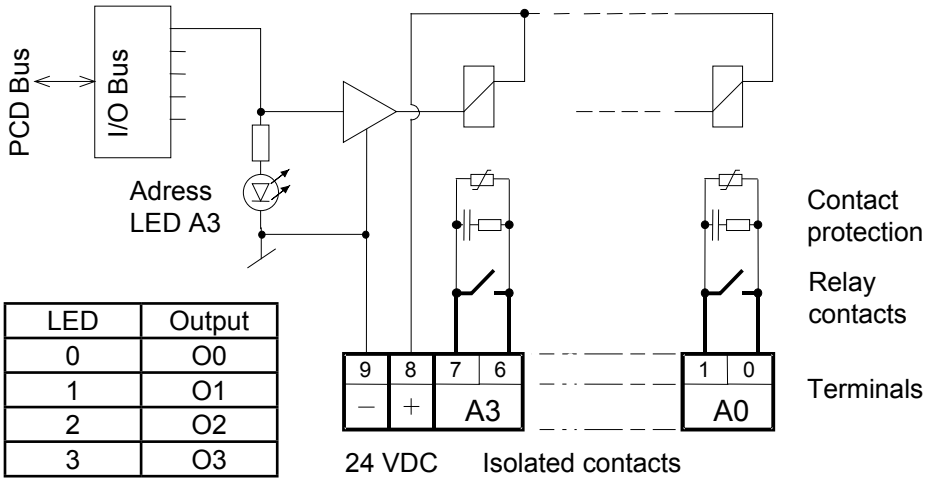

LED	Output
0	O0
1	O1
2	O2
3	O3

Relay energized (contact closed): LED on
Relay reset (contact open): LED off
24 VDC must be connected to the +/- terminals.

With an open relay contact, the current leakage through the contact protection is **0.7 mA** (at 230 V / 50 Hz). This should be taken into account for smaller AC loads. If this is too high, it is recommended to use a PCD2.A220 module (without contact protection).

Watchdog: This module can be used on all base addresses; there is no interaction with the watchdog on the CPUs. For details, please refer to the "Watchdog" section, which describes the correct use of the watchdog in conjunction with PCD2 components.

6.5.2 PCD2.A210, 4 relays with break contacts, with contact protection

Application

The module contains 4 relays with normally-open contacts for direct or alternating current up to 2 A, 250 VAC. The contacts are protected by a varistor. The module is especially suited wherever perfectly isolated AC switching circuits with infrequent switching have to be controlled.

Technical data

Number of outputs:	4, electrically isolated break contacts
Type of relay (typical):	RE 014024, SCHRACK
Switching capacity: (contact lifetime)	2 A, 250 VAC AC1 0.7 x 10^6 operations 1 A, 250 VAC AC11 1.0 x 10^6 operations 2 A, 50 VDC DC1 0.3 x 10^6 operations [3] 1 A, 24 VDC DC11 0.1 x 10^6 operations [1][3]
Relay coil supply: [2]	nominal 24 VDC smoothed or pulsed,9 mA per relay coil
Voltage tolerance, dependent on ambient temperature:	20 °C: 17.0…35 VDC 30 °C: 19.5…35 VDC 40 °C: 20.5…32 VDC 50 °C: 21.5…30 VDC
Output delay:	typically 5 ms at 24 VDC
Resistance to interference: acc. to IEC 801-4	4 kV under direct coupling 2 kV under capacitive coupling (whole trunk group)
Internal current consumption: (from +5 V bus)	1…15 mA typ. 10 mA
Internal current consumption: (from V+ bus)	0 mA
External current consumption:	max. 32 mA
Terminals:	Pluggable 10-pole screw terminal block (4 405 4847 0), for wires up to 1.5 mm²
[1] With external protective diode [2] With reverse voltage protection [3] These ratings are not UL-listed	

The Annex, Section A.4 "Relay contacts" contains measurement details and suggested wiring for the relay contacts. For safe switching and a long service life, these figures must be observed.

LEDs and connection terminals

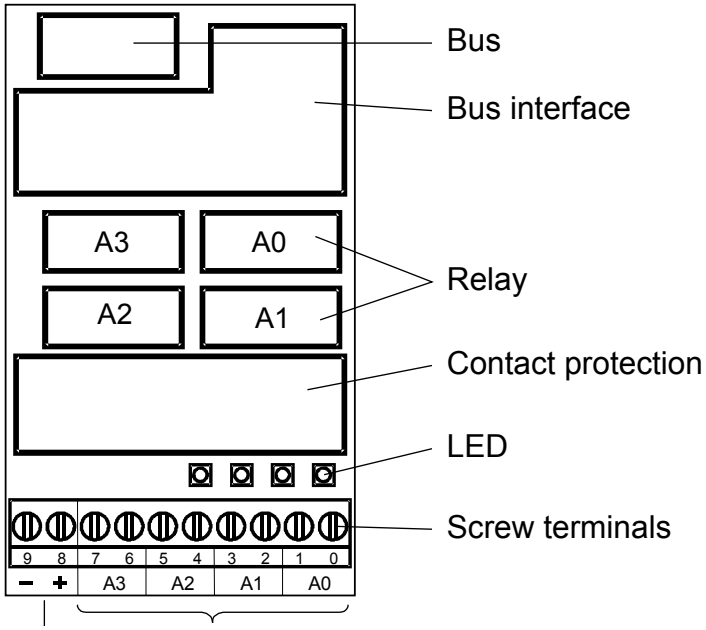

Output circuits and terminal designation

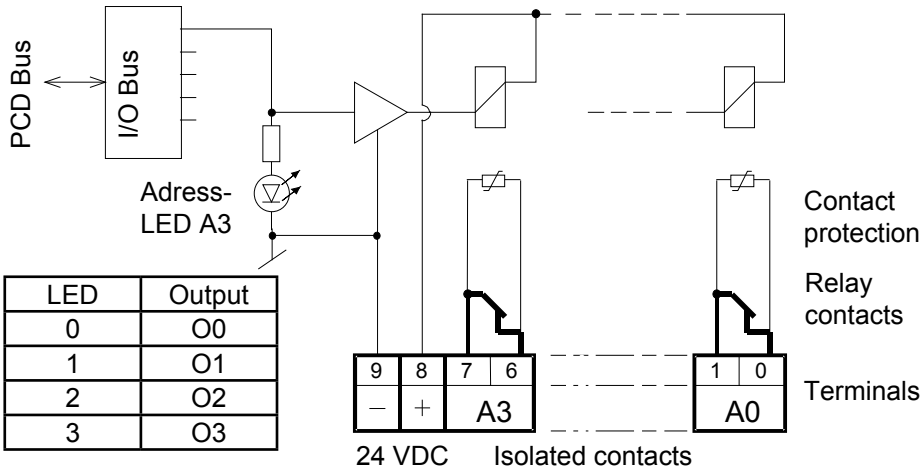

LED	Output
0	O0
1	O1
2	O2
3	O3

Relay energized (contact open): LED on
Relay reset (contact closed): LED off
24 VDC must be connected to the +/- terminals.

Watchdog: This module can be used on all base addresses; there is no interaction with the watchdog on the CPUs. For details, please refer to the "Watchdog" section, which describes the correct use of the watchdog in conjunction with PCD2 components.

6.5.3 PCD2.A220, 6 relays with make contacts, without contact protection

Application

The module contains 6 relays with normally-open contacts for direct or alternating current up to 2 A, 250 VAC. The module is especially suited wherever AC switching circuits with infrequent switching have to be controlled. For space reasons, there is no integrated contact protection. Each group of 3 relays has a common connection.

Technical data

Number of outputs:	3 + 3 make contacts with shared terminal
Type of relay (typical):	RE 030024, SCHRACK
Switching capacity: (contact lifetime)	2 A, 250 VAC AC1 0.7 x 10^6 operations 1 A, 250 VAC AC11 1.0 x 10^6 operations 2 A, 50 VDC DC1 0.3 x 10^6 operations [3] 1 A, 24 VDC DC11 0.1 x 10^6 operations [1][3]
Relay coil supply: [2]	nominal 24 VDC smoothed or pulsed, 8 mA per relay coil
Voltage tolerance, dependent on ambient temperature:	20 °C: 17.0…35 VDC 30 °C: 19.5…35 VDC 40 °C: 20.5…32 VDC 50 °C: 21.5…30 VDC
Output delay:	typically 5 ms at 24 VDC
Resistance to interference: acc. to IEC 801-4	4 kV under direct coupling 2 kV under capacitive coupling (whole trunk group)
Internal current consumption: (from +5 V bus)	1…20 mA typ. 10 mA
Internal current consumption: (from V+ bus)	0 mA
External current consumption:	max. 48 mA
Terminals:	Pluggable 10-pole screw terminal block (4 405 4847 0), for wires up to 1.5 mm²
[1] With external protective diode [2] With reverse voltage protection [3] These ratings are not UL-listed	

The Annex, Section A.4 "Relay contacts" contains measurement details and suggested wiring for the relay contacts. For safe switching and a long service life, these figures must be observed.

LEDs and connection terminals

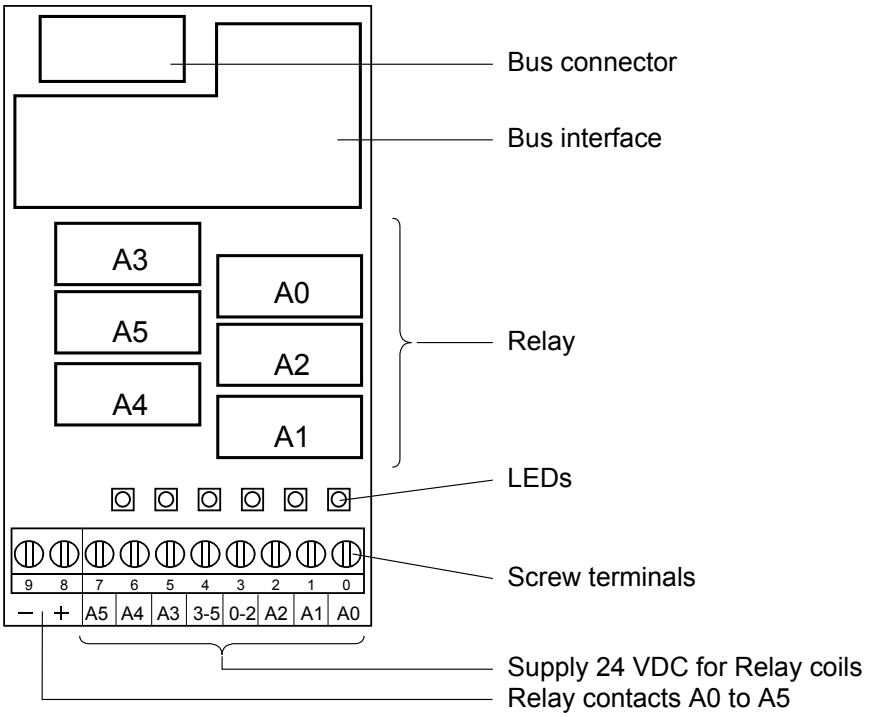

Output circuits and terminal designation

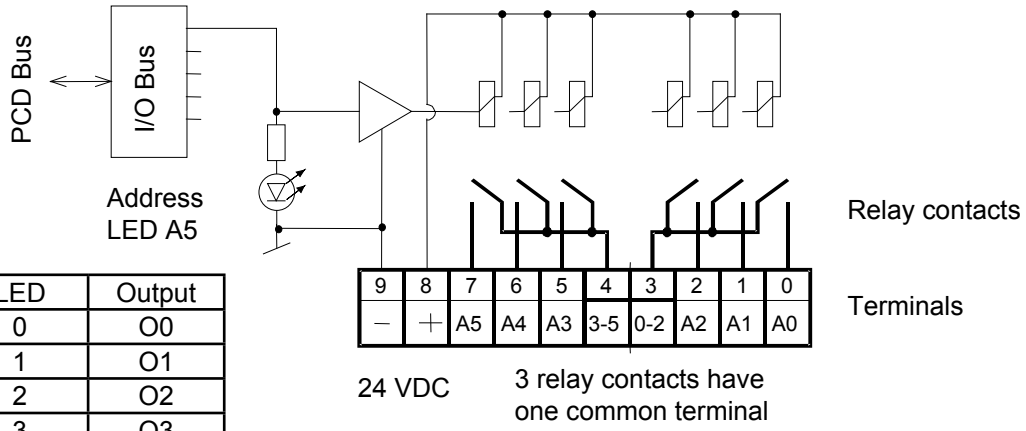

LED	Output
0	O0
1	O1
2	O2
3	O3
4	O4
5	O5

Relay energized (contact closed): LED on
Relay reset (contact open): LED off
24 VDC must be connected to the +/- terminals.

Watchdog: This module can be used on all base addresses; there is no interaction with the watchdog on the CPUs. For details, please refer to the "Watchdog" section, which describes the correct use of the watchdog in conjunction with PCD2 components.

6.5.4 PCD2.A250, 8 relays with make contacts, without contact protection

Application

The module contains 8 relays with normally-open contacts for direct or alternating current up to 2 A, 48 VAC. The module is especially suited wherever AC switching circuits with infrequent switching have to be controlled. For space reasons, there is no integrated contact protection.

Technical data

Number of outputs:	4 + 4 make contacts with shared terminal
Type of relay (typical):	RE 030024, SCHRACK
Operating mode:	> 12 V, > 100 mA
Switching capacity: *) (contact lifetime)	2 A, 48 VAC AC1 0.7 x 10^6 operations 1 A, 48 VAC AC11 1.0 x 10^6 operations 2 A, 50 VDC DC1 0.3 x 10^6 operations [3] 1 A, 24 VDC DC11 0.1 x 10^6 operations [1][3]
Relay coil supply: [2]	nominal 24 VDC smoothed or pulsed, 8 mA per relay coil
Voltage tolerance, dependent on ambient temperature:	20 °C: 17.0…35 VDC 30 °C: 19.5…35 VDC 40 °C: 20.5…32 VDC 50 °C: 21.5…30 VDC
Output delay:	typically 5 ms at 24 VDC
Resistance to interference: acc. to IEC 801-4	4 kV under direct coupling 2 kV under capacitive coupling (whole trunk group)
Internal current consumption: (from +5 V bus)	1…25 mA typ. 15 mA
Internal current consumption: (from V+ bus)	0 mA
External current consumption:	max. 64 mA
Terminals:	Pluggable 14-pole screw terminal block (4 405 4869 0), for wires up to 0.6 mm²
[1] With external protective diode [2] With reverse voltage protection [3] These ratings are not UL-listed	

***)** Higher voltages are not allowed for this module because clearances between circuit paths too small.

The Annex, Section A.4 "Relay contacts" contains measurement details and suggested wiring for the relay contacts. For safe switching and a long service life, these figures must be observed.

LEDs and connection terminals

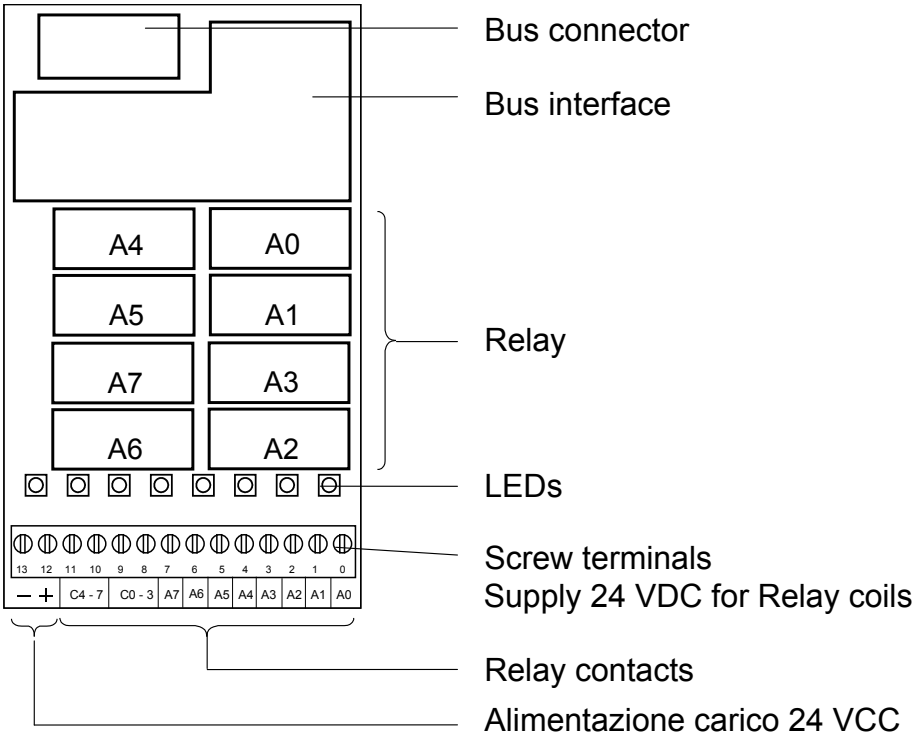

Output circuits and terminal designation

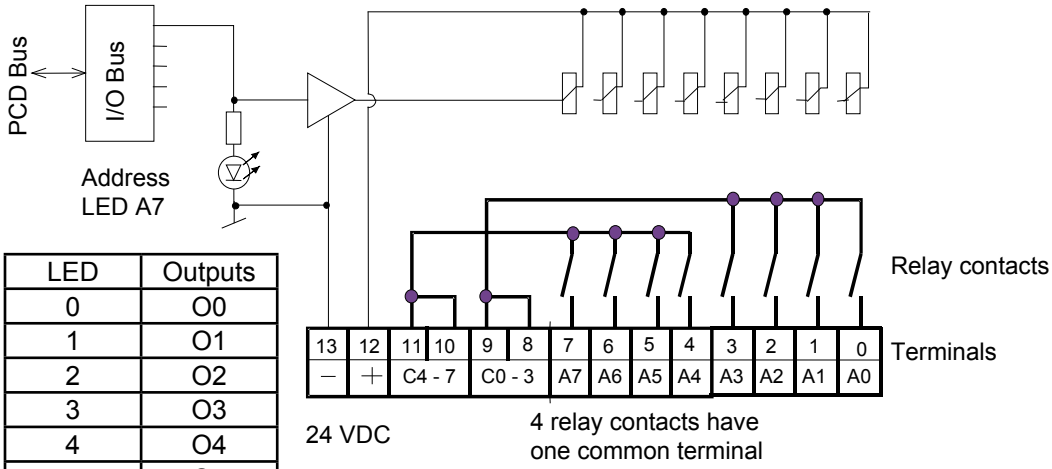

LED	Outputs
0	O0
1	O1
2	O2
3	O3
4	O4
5	O5
6	O6
7	O7

Relay energized (contact closed): LED on
Relay reset (contact open): LED off
24 VDC must be connected to the +/- terminals.

Watchdog: This module can be used on all base addresses; there is no interaction with the watchdog on the CPUs. For details, please refer to the "Watchdog" section, which describes the correct use of the watchdog in conjunction with PCD2 components.

6.5.5 PCD2.A410, 8 digital outputs for 0.5 A each, electrically isolated

Application

Output module, electrically isolated from the CPU, with 8 MOSFET transistor outputs, without short-circuit protection. Voltage range 5…32 VDC.

This module is not suitable for triggering the PCA2.D12/D14 display modules.

Technical data

Number of outputs:	8, electrically isolated
Output current:	1...500 mA...2 A (leakage current max. 0.1 mA) In the voltage range 5…24 VDC, the load resistance should not be less than 48 Ω
Total current per module:	4 A on 100% duty cycle
Operating mode:	Source operation (positive switching)
Voltage range:	5…32 VDC, smoothed 10…25 VDC, pulsed
Voltage drop:	≤ 0.4 V at 0.5 A
Output delay:	Switch-on delay typically 10 µs Switch-off delay typically 50 µs (ohmic load 5..500 mA), longer with inductive load, because of the protective diode.
Isolation voltage:	1000 VAC, 1 min.
Resistance to interference: acc. to IEC 801-4	4 kV under direct coupling 2 kV under capacitive coupling (whole trunk group)
Internal current consumption: (from +5 V bus)	1…24 mA typ. 15 mA
Internal current consumption: (from V+ bus)	0 mA
External current consumption:	Load current
Terminals:	Pluggable 10-pole screw terminal block (4 405 4847 0), for wires up to 1.5 mm²

LEDs and connection terminals

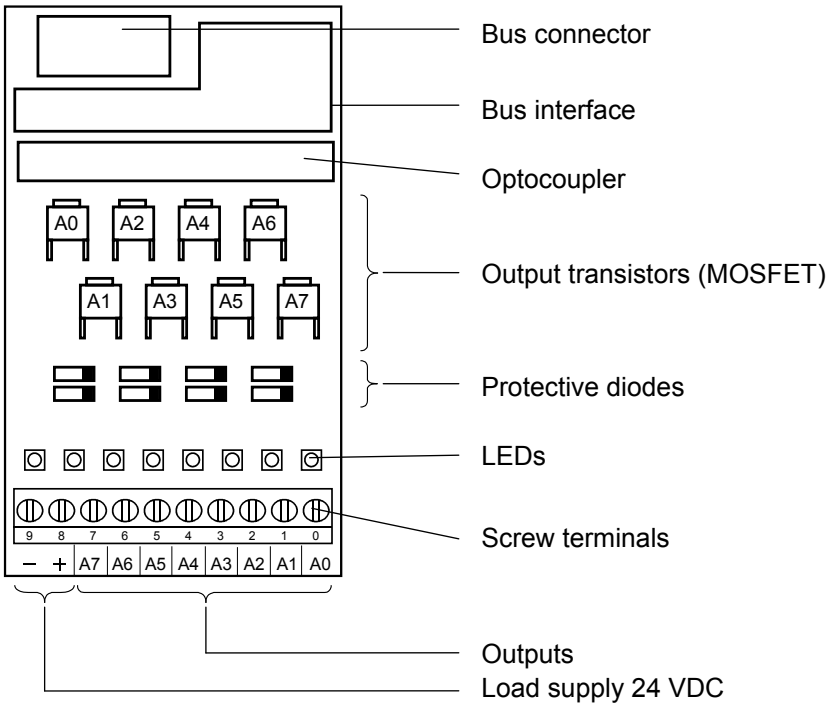

Output circuits and terminal designation

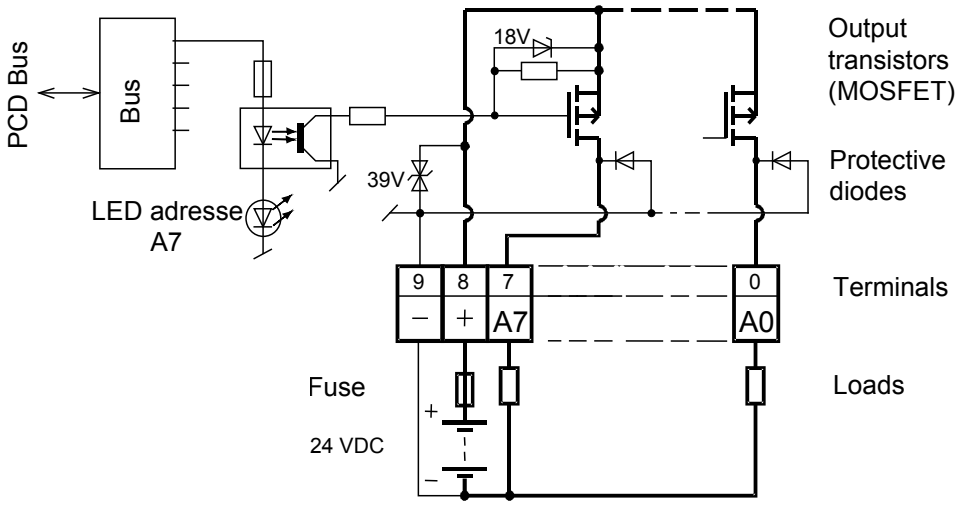

Output conducting (set): LED on
Output disconnected (reset): LED off

Fuse: It is recommended that each module should be separately protected with a fast-blow (S) 4 A fuse

Watchdog: This module can be used on all base addresses; there is no interaction with the watchdog on the CPUs. For details, please refer to the "Watchdog" section, which describes the correct use of the watchdog in conjunction with PCD2 components.

6.6 Digital combined input/output modules

PCD2.B100	2 inputs, 2 outputs, 4 selectable as inputs or outputs

Definition of input signals

for 24 VDC	for 24 VDC
PCD2.B100; E0 and E1	PCD2.B100; E2 to E5
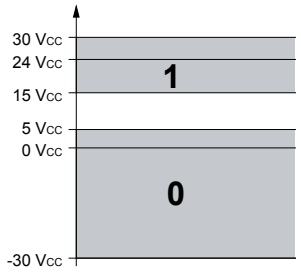	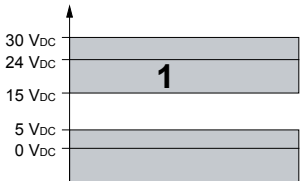

I/O modules and I/O terminal blocks may only be plugged in and removed when the PCD and the external +24 V are disconnected from the power supply.

6.6.1 PCD2.B100, 2 inputs + 2 outputs + 4 digital inputs/outputs (selectable)

Application

Economical combined input/output module with:

- 2 inputs 24 VDC/8 ms for source operation, electrically connected
- 2 transistor outputs 0.5 A/5…32 VDC, electrically connected, not short-circuit-protected, and
- 4 combined I/Os 24 VDC/ 8 ms or 0.5 A/5…32 VDC on shared I/O terminals.

Technical data on inputs

Number of inputs:	6 (2 + 4), electrically connected, source operation
Input voltage:	24 VDC smoothed or pulsed
2 inputs E0 and E1 low-range: high range:	 -30…+5 V +15…+32 V
4 inputs E/A2...E/A5 low-range: high range:	 -0.5…+5 V *) +15…+32 V
All 6 inputs: low-high switching threshold: Switching threshold 1-0: Hysteresis: Input current (at 24 VDC): Switching delay 0-1 (at 24 VDC): Switching delay 1-0 (at 24 VDC):	13 V typically 6 V typically 7 V typically 7 mA typically 8 ms typically 8 ms typically
*) Negative voltage is restricted by the protective diode (I_{max} = 0.5 A)	

Technical data on outputs

Number of outputs:	6 (2 + 4) electrically connected, source operation not short-circuit-protected
Current:	5...500 mA steady load
Voltage range:	5…32 VDC *)
Voltage drop:	< 0.3 V at 500 mA for O6 and O7 < 0.7 V at 500 mA for I/O2...I/O5
Total current per module:	3 A steady load
Switch-on delay:	typically 10 µs
Switch-off delay:	50 µs typically (100 µs max.), (ohmic load 5..500 mA), longer for inductive load because of protective diode.
*) If the state of a combined output is to be read off, voltage U_{ext} must be at least 17 VDC, as the state and the LED are displayed via the input.	

General technical data on inputs and outputs

Resistance to interference: acc. to IEC 801-4	4 kV under direct coupling 2 kV under capacitive coupling (whole trunk group)
Internal current consumption: (from +5 V bus)	1…25 mA typ. 15 mA
Internal current consumption: (from V+ bus)	0 mA
External current consumption:	Load current
Terminals:	Pluggable 10-pole screw terminal block (4 405 4847 0), for wires up to 1.5 mm²

LEDs and connection terminals

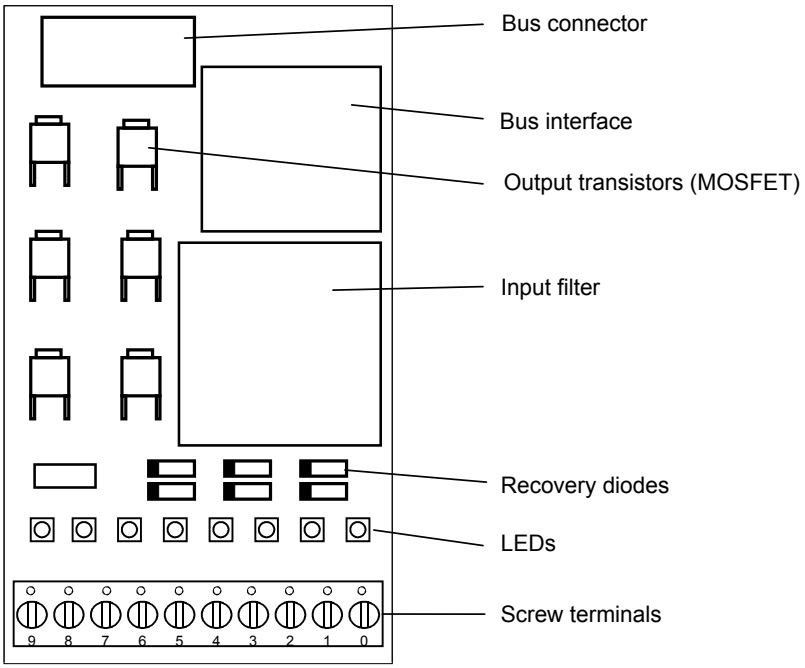

The module contains 8 LEDs:

- 2 LEDs are directly triggered by the pure inputs.
- 2 LEDs are directly triggered by the pure outputs.
- 4 LEDs are triggered by the inputs of the combined inputs/outputs and therefore always indicate voltage status at the I/O terminal.

If the combined I/Os are used as outputs, the following should be noted:
The LEDs of combined outputs I/O2...I/O5 only light up when the output is high and a supply voltage of 24 V is connected to Uext.

Mixing the combined inputs/outputs

If combined I/Os are used as inputs in source operation, i.e. with sending devices which either apply +24 V to the input or are open, the low status of an open input can be overwritten as high if the corresponding output at the same address is set in error. However, if the input is shifted to 0 V with a changeover contact and the corresponding output is set in error, the MOS-FET can be destroyed, as it is not short circuit protected. For this reason, only positive-switching contacts should be used.

Input/output circuits and terminal designation

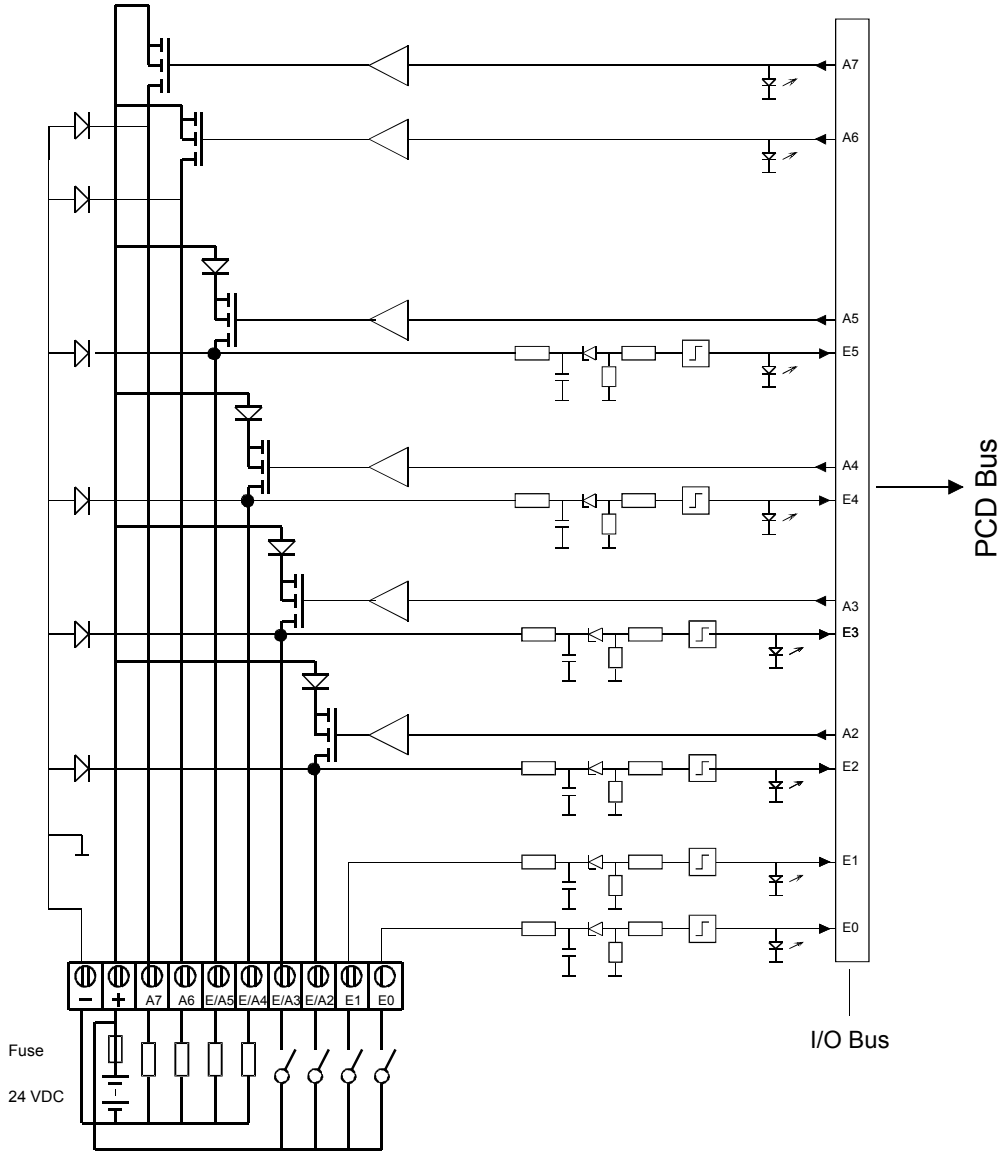

The example shows E/A2 and E/A3 used as inputs and E/A4 and E/A5 used as outputs

The following applies for the inputs:

Switch closed (input positive):	Signal state = “1” = LED on
Switch open:	Signal state = “0” = LED off

Fuse: It is recommended that each module should be separately protected with a fast-blow 3.15 A fuse.

Watchdog: This module can be used on all base addresses; there is no interaction with the watchdog on the CPUs. For details, please refer to the "Watchdog" section, which describes the correct use of the watchdog in conjunction with PCD2 components.

6.7 Multi-functional input/output modules

PCD2.G400	**Multi-functional input/output module**
PCD2.G410	**Multi-functional input/output module**

The two modules PCD2.G400 and PCD2.G410 are examples of the development and production of customer-specific versions.

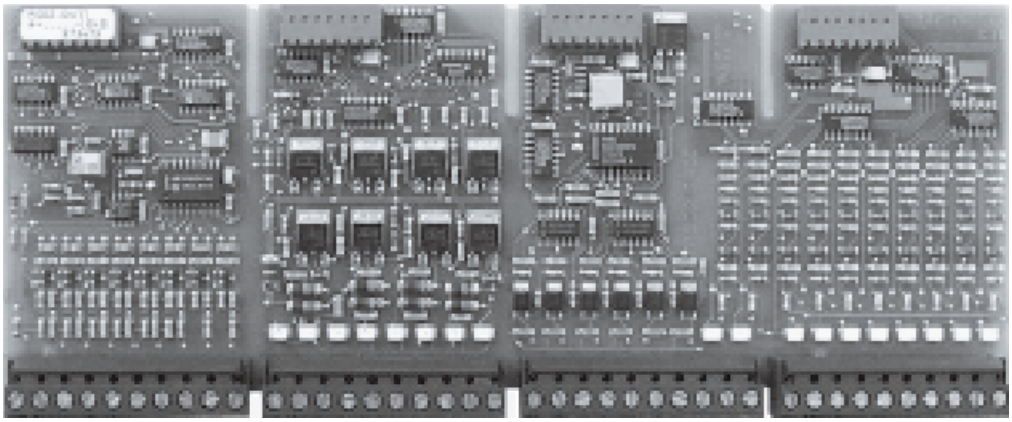

The wide range of digital and analogue I/O modules provides optimum adaptability.

- Economic: The modular structure means that it is only necessary to include (and pay for) those functions that are actually required for a specific application.
- Flexible: All modules at the I/O level can be plugged onto any preferred point on the bus and are easy to exchange.
- Functional security: Guaranteed by their robust design and excellent reliability (average field failure rate FFR >106 hours).
- Time saved in electrical wiring: Due to plug-in screw terminals, spring terminals or ready-made cables and ribbon cable adapters.

! I/O modules and I/O terminal blocks may only be plugged in and removed when the PCD and the external +24 V are disconnected from the power supply.

6.7.1 PCD2.G400, multi-functional input/output module

Application

Combined module with digital and analogue inputs and outputs. This module is designed to extend the range of uses for the PCD. The functions and the technical specification are based on the existing PCD2 modules.

The technical details should be taken from the descriptions of these modules.

Number and type of inputs/outputs

10 digital inputs, E0…E9 (addresses 0…9)

Technical data as for PCD2.E110, but without the option of sink operation option, i.e. no “L” connection.

6 analogue outputs, O16…O21 (base address 16, channels 0…5)

0…10 VDC / 8 bit, other tech. details as for PCD2.W400.

8 digital outputs, O32…O39 (addresses 32…39)

24 VDC / 0.5 A; remaining tech. data as for PCD2.A400.

2 analogue inputs, I48 and I49 (base address 48, channels 0…1)

0…10 VDC / 10 bit, other tech. details as for PCD2.W400.

6 analogue inputs, I50…I55 (base address 48, channels 2…7)

Pt/Ni 1000 / 10 bit with data as for PCD2.W220.

Internal current consumption from	+5 V bus:	10…65 mA
	V+ Bus:	35 mA

LEDs and connection terminals

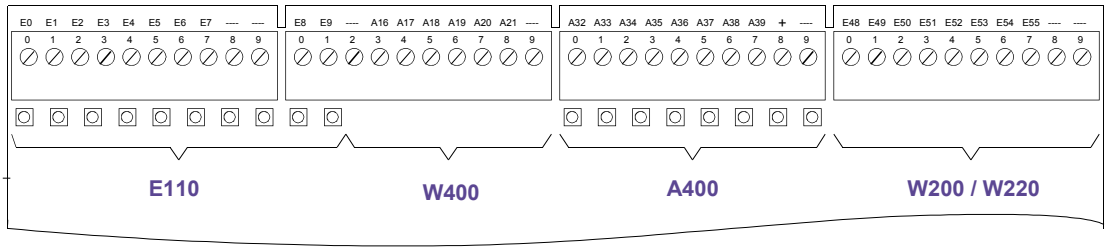

The module can be installed on sockets 1…4 (top) on the PCD2.

6.7.2 PCD2.G410, multi-functional I/O module with elect. isolated digital I/O

Application

Combined module with digital and analogue inputs and outputs. This module is designed to extend the range of uses for the PCD. The functions and the technical specification are based on the existing PCD2 modules.

This module cannot be installed in the PCD1.

The technical details should be taken from the descriptions of these modules.

Number and type of inputs/outputs

16 digital inputs, electrically isolated, I0…I15, (addresses 0…15).

Tech. data as for PCD2.E610,
Source or sink operation selectable via "Q/S" jumper.

4 relay outputs, O16…O19 (addresses 16…19),

Each with a changeover contact protected with 2 varistors.
Tech. data as for PCD2.A200.
The 24 V supply to the relay coils is via the screwless terminals “U_{ext}”, located next to the 4 relays.

4 analogue outputs, with 8 bit resolution, O32...O35 (base addr 32 *, channels 0...3)

Each channel selectable with "U/I" jumper for voltage 0...10 V or current 0...20 mA.
Tech. data as for PCD2.W410.

4 analogue intputs, with 10 bit resolution, I48...I51 (base addr 48 *, channels 0...3)

Each channel can be configured separately with the jumper combinations shown for voltage 0…10 V (“U”), current 0...20 mA (“I”) or for resistive temperature sensors Pt/Ni1000 (“T”) for a temperature range from -20…+100°C.
Tech. data as for PCD2.W2xx.

Internal current consumption from	+5 V bus	10…50 mA
	V+ Bus	10…40 mA

24 V connection (U_{ext}):	This is located next to the 4 relays as screwless terminal “U_{ext}”. The 24 V supply is common to the relay coils and the external supply to the analogue outputs.
Current consumption:	9 mA per relay 20 mA per analogue output

* (when the module is installed on sockets 1…4 on the PCD2).

LEDs and connection terminals

The terminal numbering refers to the use of the module on sockets 1...4 (top) on the PCD2. If the module is installed on sockets 5..8 (bottom), the value 64 must be added to the addresses given. When using the module in the PCD2.C100 expansion housing, the same logic applies, with the value 128 to be added to the 'top' and 192 to the 'bottom'.

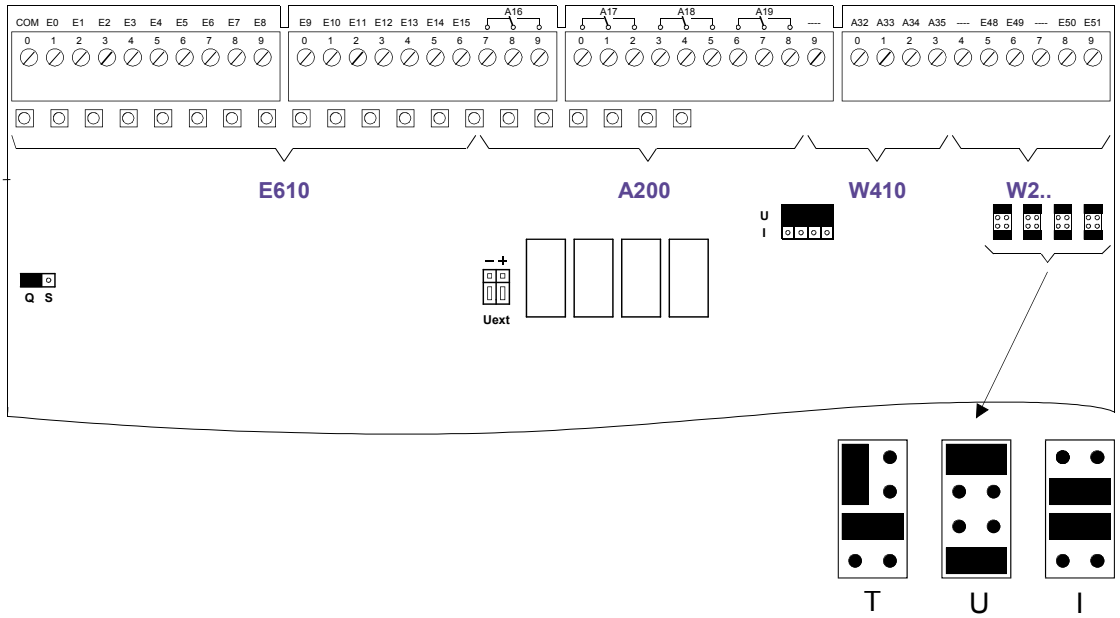

Jumper Config.

Factory settings:	I0…I15	Source operation:	Q
	O32…O35	Voltage:	0…10 V “U”
	I48…I51	Voltage:	0…10 V “U”

6.8 Analogue input modules

PCD2.W200	**8 analogue inputs 10 bit, 0…10 V**
PCD2.W210	**8 analogue inputs 10 bit, 0…20 mA**
PCD2.W220	**8 analogue inputs 10 bit, Pt/Ni 1000**
PCD2.W220Z02	**8 analogue inputs 10 bit, NTC 10**
PCD2.W220Z12	**8 analogue inputs 10 bit, 4 × 0…10 V, 4 × Pt/Ni 1000**
PCD2.W300	**8 analogue inputs 12 bit, 0…10 V**
PCD2.W310	**8 analogue inputs 12 bit, 0…20 mA**
PCD2.W340	**8 analogue inputs 12 Bit, 0…10 V, 0…20 mA, Pt/Ni 1000 *)**
PCD2.W350	**8 analogue inputs 12 bit, Pt/Ni 100**
PCD2.W360	**8 analogue inputs 12 bit, resolution ‹ 0.1 °C, Pt 1000**

*) jumper selectable

6

I/O modules and I/O terminal blocks may only be plugged in and removed when the PCD and the external +24 V are disconnected from the power supply.

6.8.1 PCD2.W2x0, analogue inputs, 8 channels, 10 bit resolution

Application

With its short conversion time of <50 µs, this module is universally suitable for recording analogue signals. The only limitations are with weak signals, as with Pt 100 resistive temperature sensors, or with thermocouples.

Module overview

PCD2.W200	8 channels for signals 0…10 V
PCD2.W210	8 channels for signals 0…20 mA
PCD2.W220	8 channels for resistive temperature sensors Pt/Ni 1000
PCD2.W220Z02	8 channels for NTC10 temperature sensors
PCD2.W220Z12	4 channels for signals 0…10 V 4 channels for resistive temperature sensors Pt/Ni 1000

6

Technical data

Signal ranges:	see module overview
Galvanic separation:	no
Resolution (digital representation):	10 bit (0…1023)
Measuring principle:	non-differential, single-ended
Input resistance:	0…10 V: 80 kΩ / 0.15 % 0…20 mA: 125 Ω / 0,1 % Pt/Ni 1000: 7,5 kΩ / 0,1 % NTC 10: 10 kΩ / 0,1 %
Maximum measurement current for resistance measurement with W220:	1.5 mA
Accuracy: (of measured value)	± 3 LSB
Repeating accuracy (under same conditions):	within 1 LSB
Temperature error:	± 0,3 % (± 3 LSB) (over a temperature range from 0°…+55 °C)
Conversion time A/D:	<50 µs
Overvoltage protection:	W200/220: ± 50 VDC
Overcurrent protection:	W210: ±40 mA
Burst protection: (IEC 1000-4-4)	± 1 kV, with unshielded cables ± 2 kV, with shielded cables
Time constant of input filter:	W200: typically 5 ms W210: typically 1 ms W220 : typically 10 ms
Internal current consumption: (from +5 V bus)	8 mA (W200/210/220)
Internal current consumption: (from V+ bus)	5 mA (W200/210) 16 mA (W220)
External current consumption:	0 mA
Terminals:	Pluggable 10-pole screw terminal block (4 405 4847 0), for wires up to 1.5 mm²

If an input receives a signal with incorrect polarity, the measurement results for the other channels will be significantly distorted.

Connections

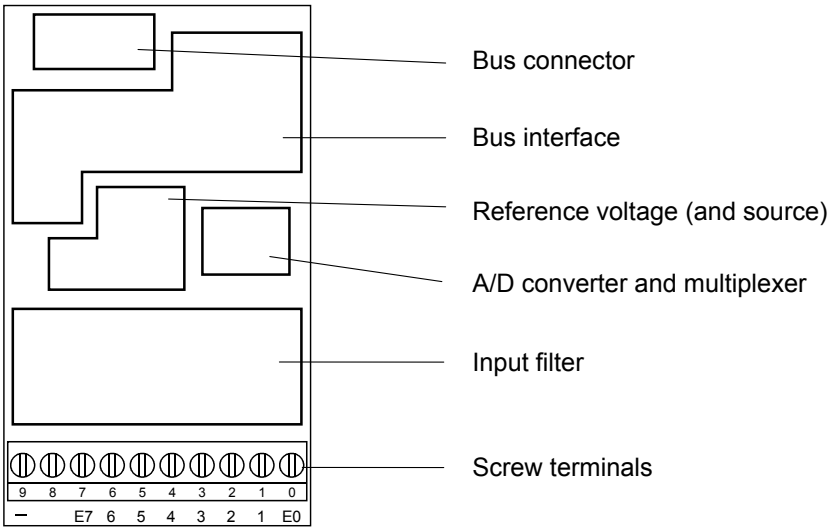

Digital/analogue values

Input signals and type			Digital values		
PCD2.W200	**PCD2.W210**	**PCD2.W220**	**Classic**	**xx7**	**Simatic**
+ 10.0 V	+ 20 mA	Calculate the appropriate values with the formulae at the end of this section	1023	1023	27648
+ 5.0 V	+ 10 mA		512	512	13824
	+ 4 mA		205	205	5530
0 V	0 mA		0	0	0
– 10.0 V	– 20 mA		0	0	0

Connection diagram for PCD2.W200

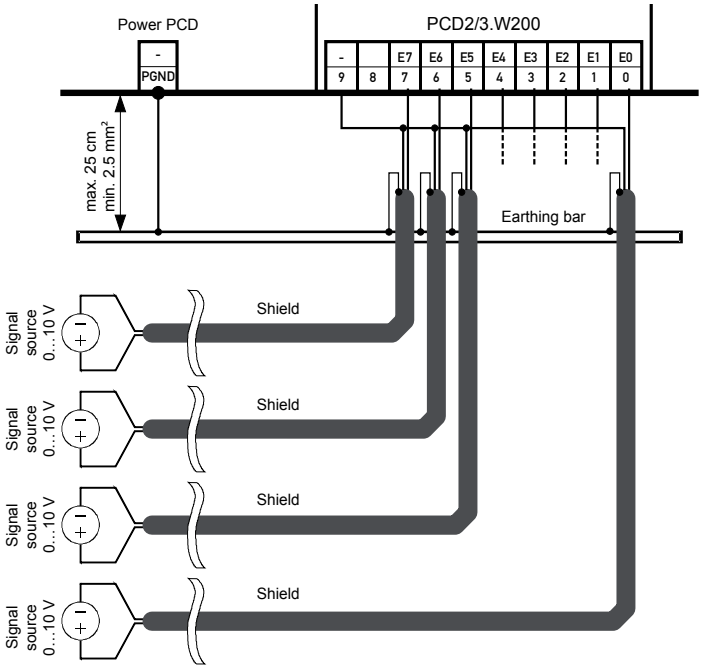

Connection diagram for PCD2.W210, two-wire transducer

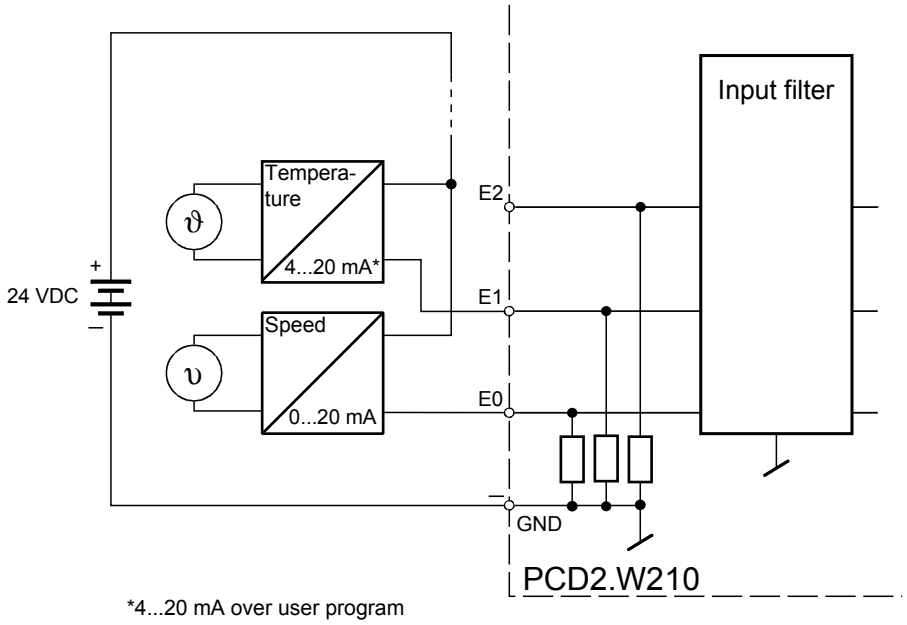

Two-wire transducers (0..20 mA and 4...20 mA transmitters) need a 24 VDC supply in the measuring trunk.

Connection concept PCD3.W220 Pt1000 / Ni1000
Connection concept PCD3.W220Z02 NTC10

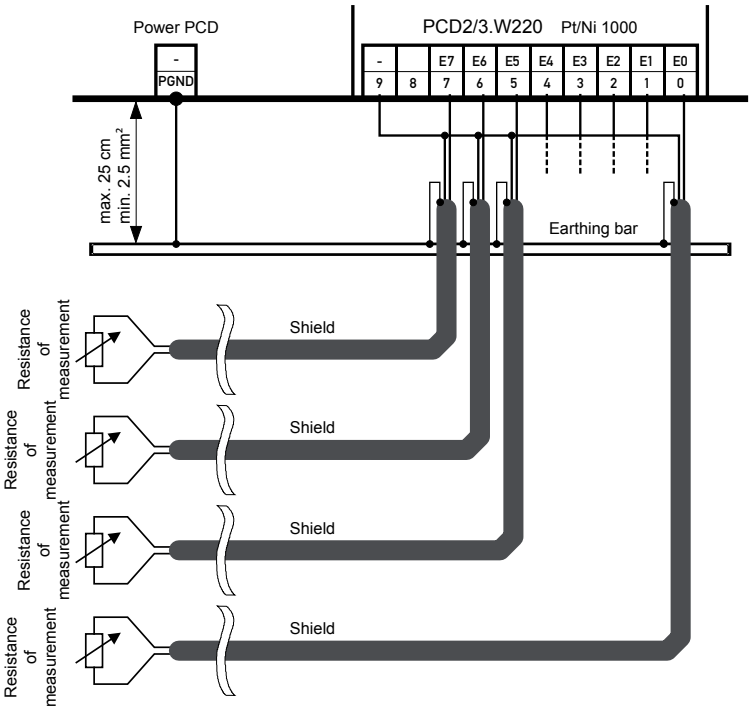

Connection concept PCD3.W220Z12
4 × 0…10 V and 4 × Pt1000 / Ni1000

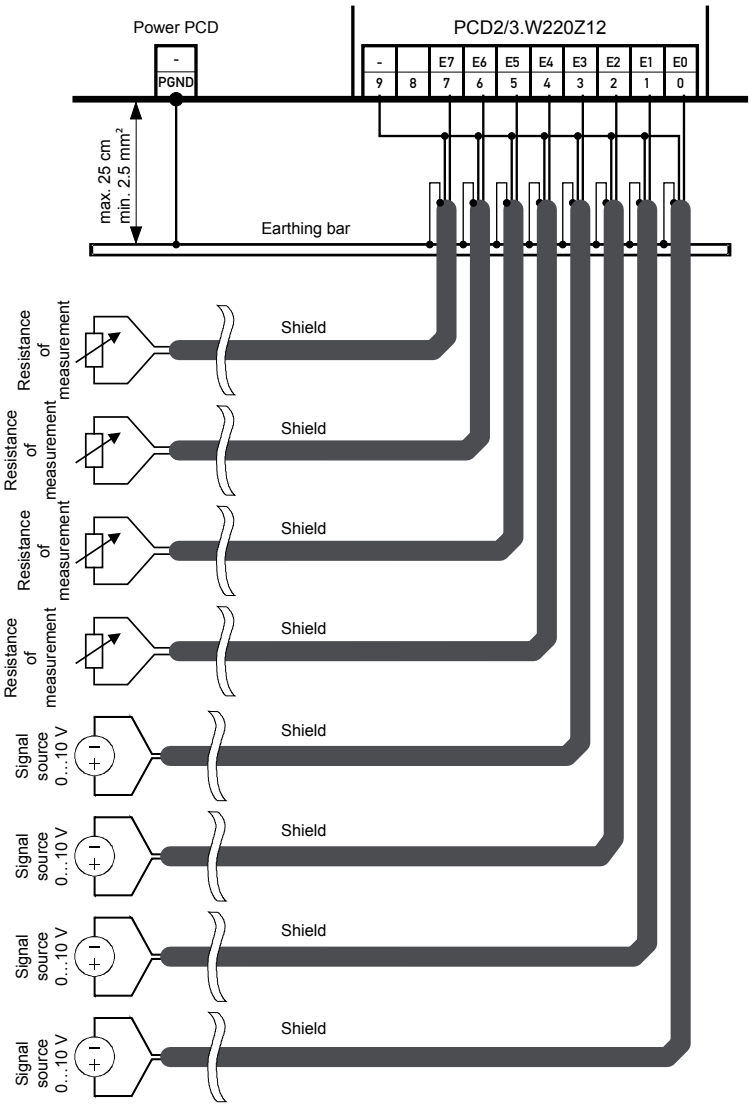

6

Block diagram

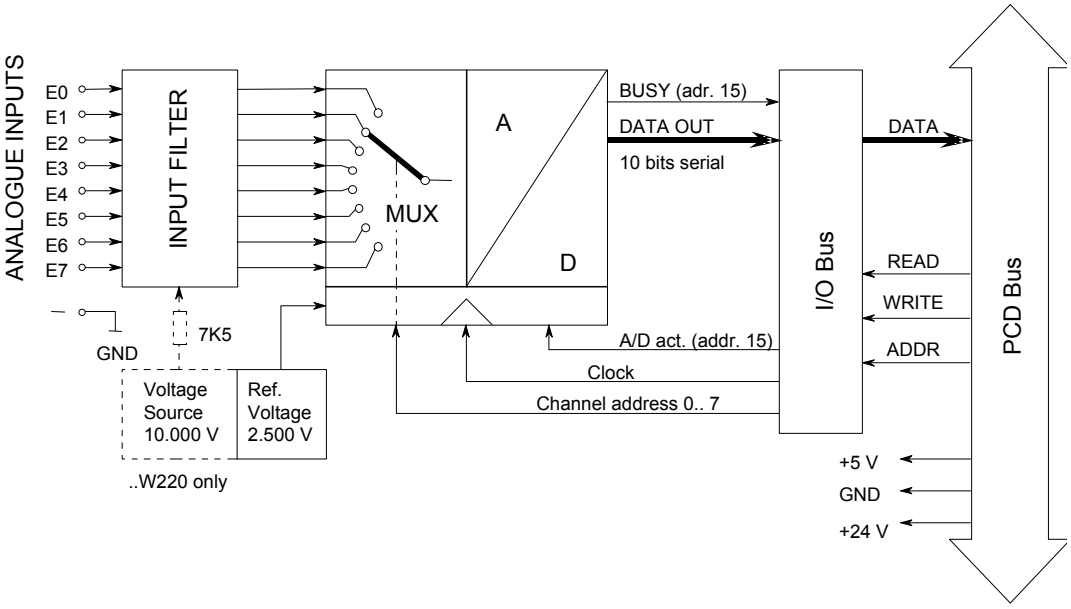

Watchdog: This module cannot be used on the base address 240, because it would interact with the watchdog, and would cause a malfunction.

Classic

Programming examples for the PCD3.W2x0 can be found in a separate manual and on the TCS Support site www.sbc-support.ch.

xx7

xx7 and RIOs: the firmware reads in the values according to the configuration (I/O Builder or network configurator).

!

Watchdog: This module can interact with the watchdog, if it is used on base address 240. In this case, the last input with address 255 cannot be used.
For details, please refer to the "Watchdog" section, which describes the correct use of the watchdog in conjunction with PCD3 components.

Temperature measurement with Pt 1000

In the temperature range -50 °C to +200 °C, the following formulae can be used for working to an accuracy of ± 1 % (± 1.5 °C). Repeating accuracy is significantly higher.

$$T[°C] = \frac{DV}{2.08 - (0.509 \cdot 10^{-3} \cdot DV)} - 261.8$$

T = temperature in °C DV = digital value (0…1023)

Example 1: digital value DV = 562
temperature T in °C?

$$T[°C] = \frac{562}{2.08 - (0.509 \cdot 10^{-3} \cdot 562)} - 261{,}8 = \underline{51.5\,°C}$$

$$DV = \frac{2.08 \cdot (261.8 + T)}{1 + (0.509 \cdot 10^{-3} \cdot (261.8 + T))}$$

DV = digital value (0…1023) T = temperature in °C

Example 2: preset temperature T= –10°C
corresponding digital value DV?

$$DV = \frac{2.08 \cdot (261.8 - 10)}{1 + (0.509 \cdot 10^{-3} \cdot (261.8 - 10))} = \underline{464}$$

Resistance measurement up to 2.5 kΩ

Special temperature sensors or any other resistances up to 2.5 kΩ can be connected to the PCD2.W220. The digital value can be calculated as follows:

$$DV = \frac{4092 \cdot R}{(7500 + R)}$$

where 0 ≤ DV ≤ 1023 and R = the resistance to be measured in Ω.

6.8.2 PCD2.W3x0, analogue inputs, 8 channels, 12 bit resolution

Application

High-speed input module for general use with 8 channels, each with 12 bit resolution. Different variants for voltage 0...10 V, current 0...20 mA and the use of different resistance thermometers are available.

Module overview			Rsolution *)
PCD2.W300:	Voltage 0..10 V		2,442 mV
PCD2.W310:	Current 0...20 mA		4.884 µA
PCD2.W340:	General purpose module		
	0…10 V		2,442 mV
	0…20 mA		4.884 µA
	Pt/Ni 1000 (default)		
	Pt 1000:	-50…+400 °C	0.14…0.24 °C
	Ni 1000:	-50…+200 °C	0.09…0.12 °C
PCD2.W350:	Temperature sensor		
	Pt/Ni 100		
	Pt 100:	-50…+600 °C	0.14…0.20 °C
	Ni 100:	-50…+250 °C	0.06…0.12 °C
PCD2.W360:	Temperature sensor		
	Pt 1000	-50…+150 °C	0.07…0.09 °C (resolution < 0.1 °C)
Method of linearization for temperature inputs: by software			

*) Resolution = value of least significant bit(LSB)

Technical data

Input ranges:	see module overview	
Galvanic separation:	no	
Resolution (digital representation):	12 bit (0…4095)	
Measuring principle:	non-differential, single-ended	
Input resistance:	W300: W310: W340: W350: W360:	20 kΩ / 0.15 % 125 Ω / 0.1 % U: 200 kΩ / I: 125 Ω not relevant not relevant
Maximum measurement current for temp.measurement probes:	2.0 mA	
Accuracy at 25°C	W300, 310: W340, 350, 360:	± 0.5 % ± 0.3 %
Repeat accuracy:	± 0.05 %	
Temperature error (0…+55 °C)	± 0.2 %	
Conversion time A/D:	< 10 µs	
Overvoltage protection:	W340: W300 *):	± 50 VDC (permanent) + 50 VDC (permanent)
Overcurrent protection:	W340: W310 *):	± 40 mA (permanent) + 40 mA (permanent)
EMC protection:	yes	
Time constant of input filter:	W300: W310: W340 V: C: T: W350: W360:	typically 10.5 ms typically 12.4 ms typically 7.8 ms typically 24.2 ms typically 24.2 ms typically 16.9 ms typically 16.9 ms

Internal current consumption: (from +5 V bus)	< 8 mA for all module types
Internal current consumption: (from V+ bus)	W300, 310 < 5 mA W340, 360 < 20 mA W350 < 30 mA
External current consumption:	0 mA
Terminals:	Pluggable 10-pole screw terminal block (4 405 4847 0), for wires up to 1.5 mm²
*) No negative input voltage should be applied on these modules.	

Connections

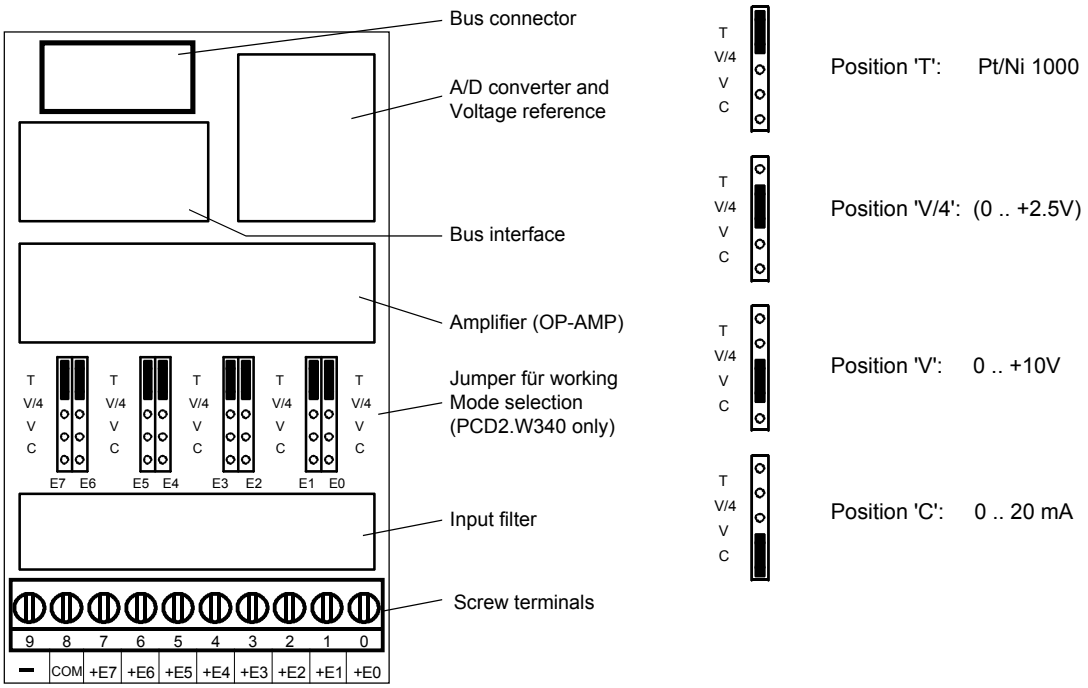

Jumper positions for selecting working mode

PCD2.W340 only; on the other module types the working modes are fixed

All inputs set to "temperature" (position T) must be connected. Unused inputs (on the W340) should be set to current ‘C’ or voltage ‘V’.

Moving the jumpers
On this circuit board there are components that are sensitive to electrostatic discharges. For further information, refer to Appendix B, "Icons"

Digital/analogue values

Input signals and type			Digital values		
PCD2.W300/W340	**PCD2.W310/W340**	**PCD2.W340/50/60**	**Classic**	**xx7**	**Simatic**
+ 10.0 V	+ 20 mA	Calculate the appropriate values with the formulae at the end of this section	4095	4095	27684
+ 5.0 V	+ 10 mA		2047	2047	13824
0 V	0 mA		0	0	0

Connection concept for voltage and current inputs

The voltage and current input signals are connected directly to the 10-pole terminal block (I0…I7). To minimize the amount of interference coupled into the module via the transmission lines, connection should be made according to the principle explained below.

The following connection diagram shows a typical wiring layout for:

- voltage inputs with the PCD2.W300 and ...W340 modules or
- current inputs with the PCD2.W310 and ...W340 modules

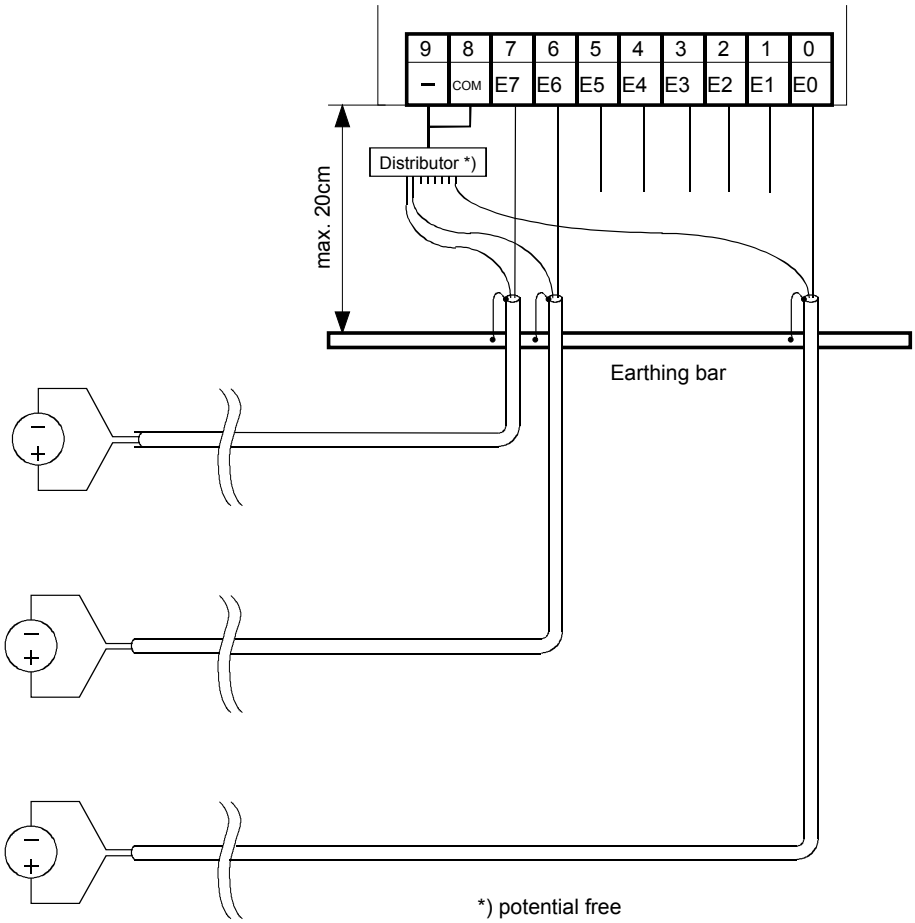

- The reference potentials of signal sources should be wired to a common GND connection ("–" and "COM" terminals). To obtain optimum measurement results, any connection to an earthing bar should be avoided.
- If shielded cables are used, the shield should be continued to an external earthing bar.

Connection concept for temperature sensors

The input signals for the temperature sensors are connected directly to the 10-pole terminal block (I0 … I7).

The following connection diagram shows a typical layout for temperature sensors with the PCD2.W340, ….W350 and ….W360 modules

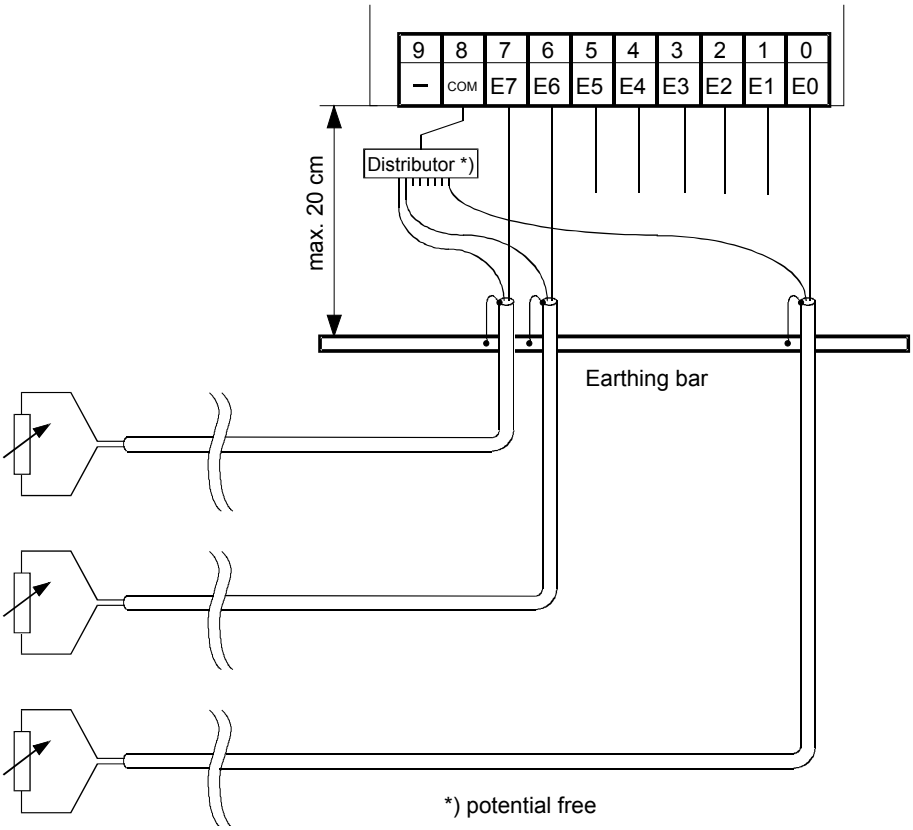

- The reference potential for temperature measurements is the “COM” terminal, which should not have any external earth or GND connection
- If screened cables are used, screening should be continued to an external earthing bar.
- Unused temperature inputs are to be connected to the logical ground.

Mixed operation

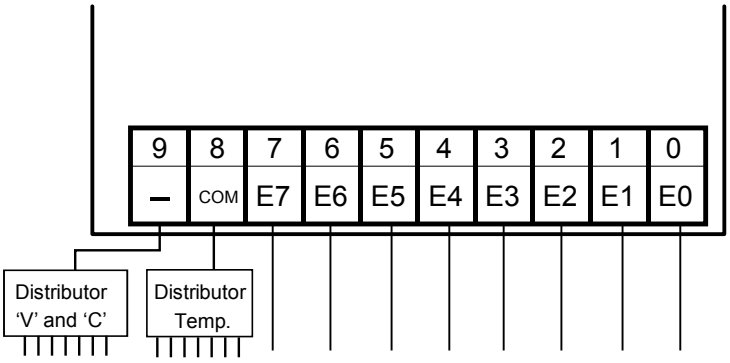

Connection concept for two-wire transducers

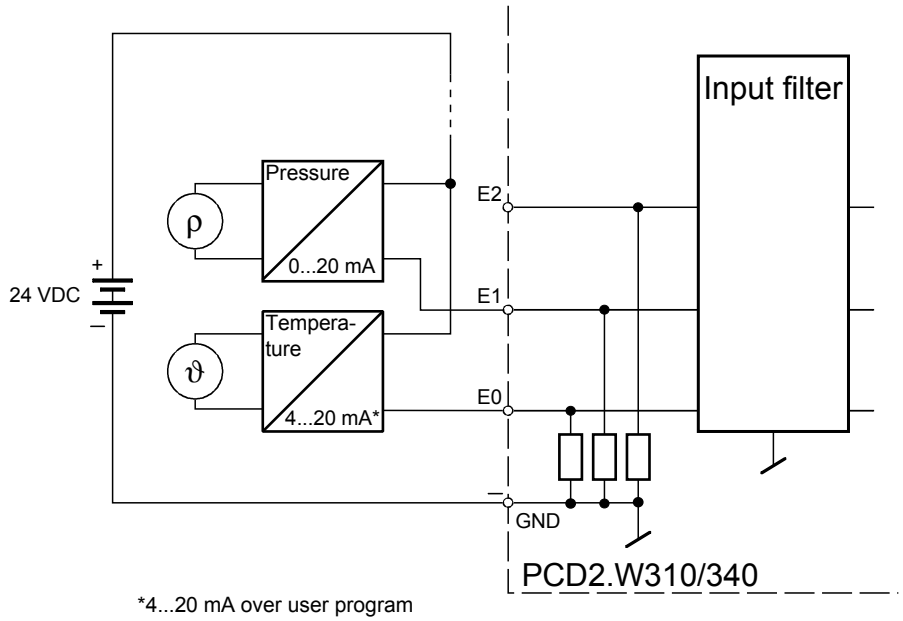

Two-wire transducers need a 24 VDC-supply in the measuring trunk.

Block diagram

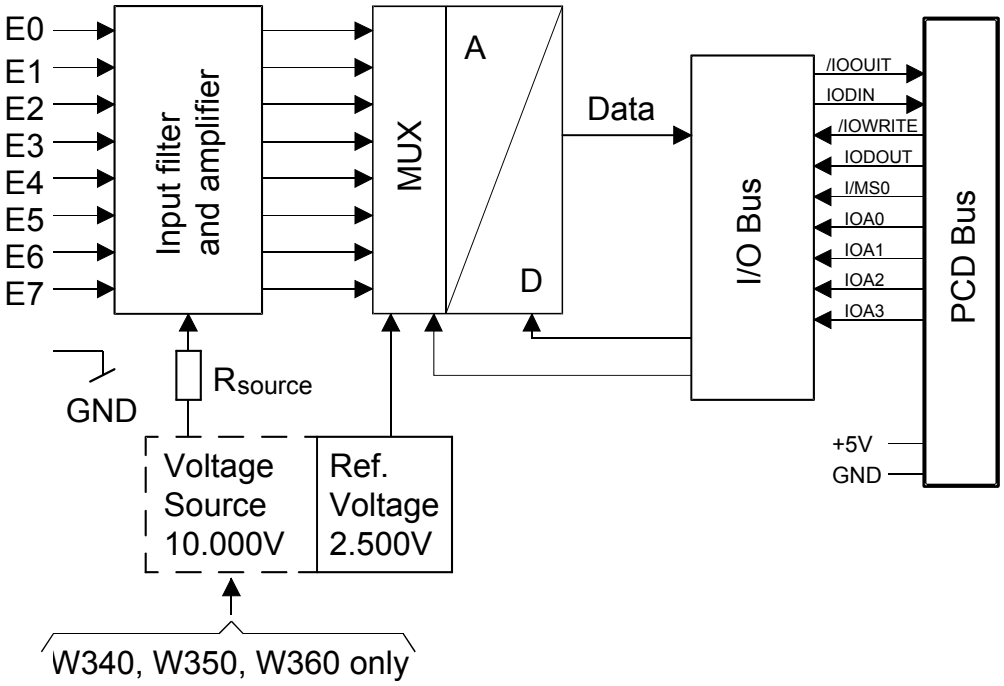

Programming

Classic: Programming examples for the PCD2.W3x0 can be found on the TCS Support site (www.sbc-support.ch + getting started).

xx7: The firmware reads in the values according to the configuration (I/O Builder)

Watchdog: This module cannot be used on the base address 240, because it would interact with the watchdog, and would cause a malfunction.

For details, please refer to the "Watchdog" section, which describes the correct use of the watchdog in conjunction with PCD2 components.

Formulae for temperature measurement

For Ni 1000 (PCD2.W340)

Validity: Temperature range - 50…+ 210 °C

Computational error: ± 0.5 °C

$$T = -188.5 + \frac{260 \cdot DV}{2616} - 4.676 \cdot 10^{-6} \cdot (DV - 2784)^2$$

For Pt 1000 (PCD2.W340)

Validity: Temperature range - 50…+400 °C

Computational error: ± 1.5 °C

$$T = -366.5 + \frac{450 \cdot DV}{2474} + 18.291 \cdot 10^{-6} \cdot (DV - 2821)^2$$

Resistance measurement up to 2.5 kΩ (PCD2.W340)

Special temperature sensors or any other resistances up to 2.5 kΩ can be connected to the PCD2.W340. The digital value can be calculated as follows:

$$DV = \frac{16\,380 \cdot R}{(7\,500 + R)}$$

where 0 ≤ DV ≤ 4095 and R=the resistance to be measured in Ω.

For Ni 100 (PCD2.W350)

Validity: Temperature range - 50…+250 °C

Computational error: ± 1.65 °C

$$T = -28.7 + \frac{300 \cdot DV}{3628} - 7.294 \cdot 10^{-6} \cdot (DV - 1850)^2$$

For Pt 100 (PCD2.W350)

Validity: Temperature range - 50…+600 °C

Computational error: ± 1 °C

$$T = -99.9 + \frac{650 \cdot DV}{3910} + 6.625 \cdot 10^{-6} \cdot (DV - 2114)^2$$

For Pt 1000 (PCD2.W360)

Validity: Temperature range - 50…+150 °C

Computational error: ± 0.25 °C

$$T = -178.1 + \frac{200 \cdot DV}{2509} + 3.873 \cdot 10^{-6} \cdot (DV - 2786)^2$$

T = temperature

DV = digital value

6.9 Analogue input modules, electrically isolated

PCD2.W305	**7 analogue inputs 12 bit resolution, 0..10 V**
PCD2.W315	**7 analogue inputs 12 bit resolution, 0..10 V**
PCD2.W325	**7 analogue inputs 12 bit resolution, 0..10 V**

Galvanic separation of outputs to PCD, channels themselves are not separated

I/O modules and I/O terminal blocks may only be plugged in and removed when the PCD and the external +24 V are disconnected from the power supply.

6.9.1 PCD2.W3x5, analogue inputs, electrically isolated, 7 channels, 12 bit resolution

Application

High-speed input modules for general use, electrically isolated from the CPU, with 7 channels, each with 12 bit resolution. Different variants for voltage 0..10 V, -10 V...+10 V and current 0..20 mA are available.

Module overview		resolution *)
PCD2.W305:	Voltage 0..10 V	2.5 mV
PCD2.W315:	Current 0...20 mA	5 µA
PCD2.W325:	Voltage -10..10 V	5 mV

*) Resolution = value of least significant bit(LSB)

Technical data

Input ranges:	see module overview
Galvanic separation:	500 V, electrical isolation of outputs to PCD, channels themselves not separated
Resolution (digital representation):	12 bit (0…4095)
Measuring principle:	non-differential, single-ended
Input resistance:	W305: 13.5 kΩ / 0.1 % W315: 120 Ω / 0.1 % W325: 13.7 kΩ / 0.1 %
Accuracy at 25°C	± 0.15 %
Repeat accuracy:	± 0.05 %
Temperature error (0…+55 °C)	± 0.25 %
Conversion time A/D:	≤ 2 ms
Overvoltage protection:	W305: ± 40 VDC (permanent) W325: ± 40 VDC (permanent)
Overcurrent protection:	W315: ± 35 mA (permanent)
EMC protection:	yes
Time constant of input filter:	typically 2.4 ms
Internal current consumption: (from +5 V bus)	< 60 mA
Internal current consumption: (from V+ bus)	0 mA
External current consumption:	0 mA
Terminals:	Pluggable 14-pole spring terminal block (4 405 5002 0), for Ø up to 1.5 mm²,

Connections

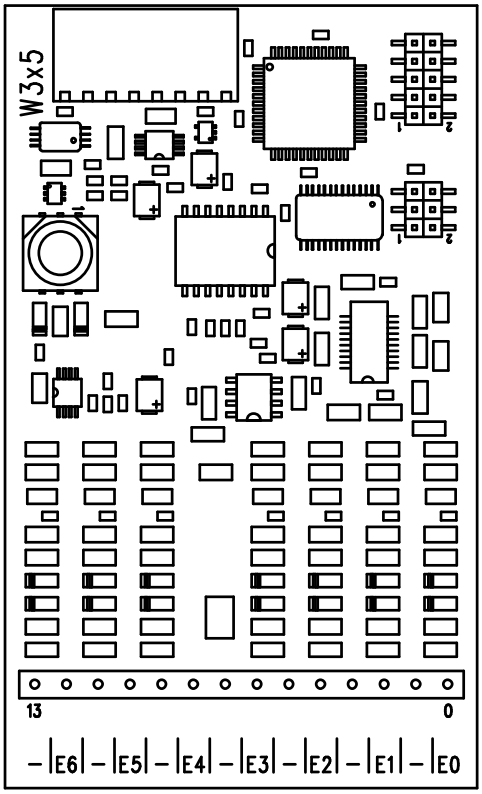

Digital/analogue values

Input signals and type			Digital values		
PCD2.W305	**PCD2.W315**	**PCD2.W325**	**Classic**	**xx7**	**Simatic**
+ 10.0 V	+ 20 mA	+10 V	4095	4095	27684
+ 5.0 V	+ 10 mA	0 V	2047	2047	13842
0 V	0 mA	-10 V	0	0	0

Connection concept for voltage and current inputs

The voltage and current input signals are connected directly to the 14-pole terminal block (I0…I6 and COM). To minimize the amount of interference coupled into the module via the transmission lines, connection should be made according to the principle explained below.

The diagram shows a typical wiring layout for:

- voltage inputs with the PCD2.W305 and .W325 modules or
- current inputs for the PCD2.W315 module
- If shielded cables are used, the shield should be continued to an external earthing bar.

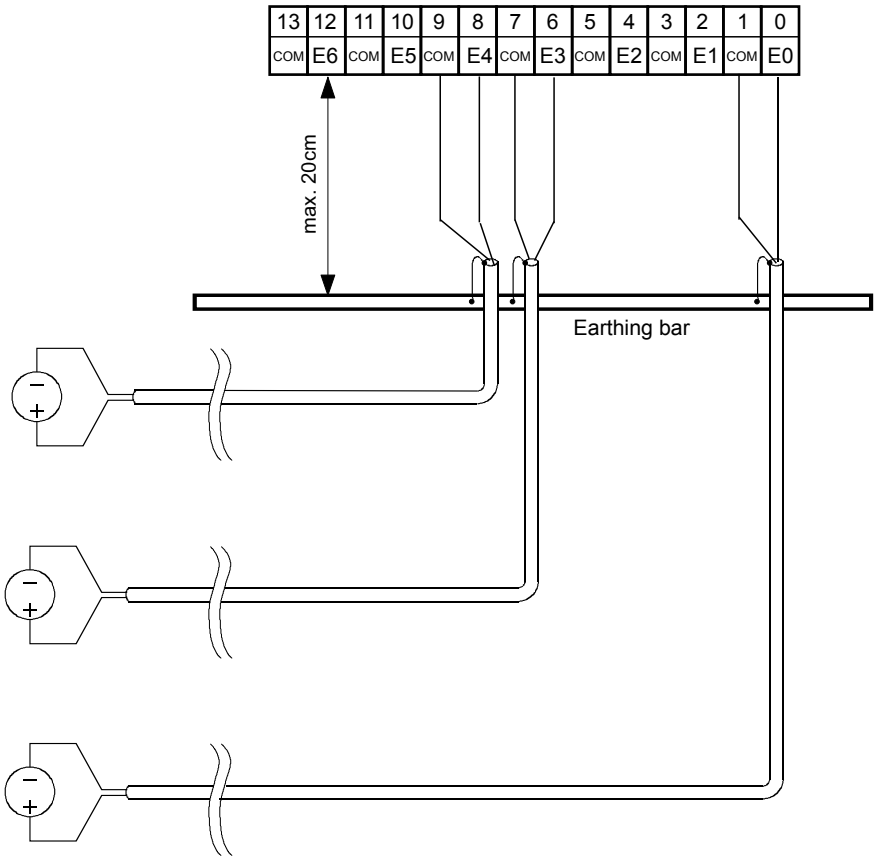

Block diagram

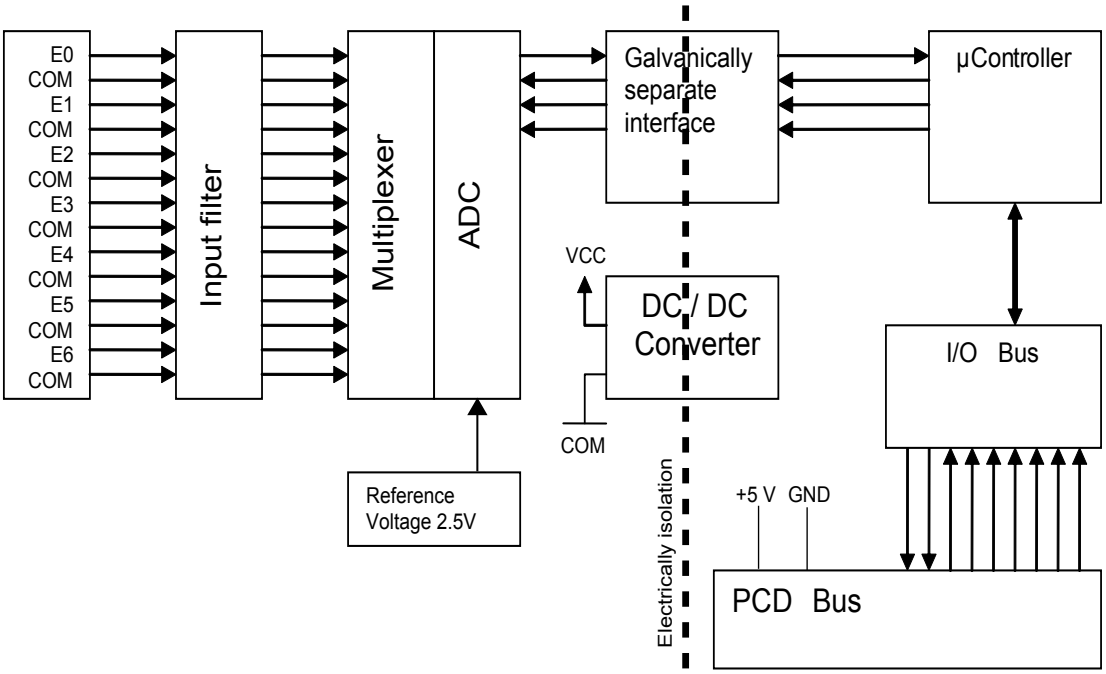

Programming

Classic:	There is an FBox for programming the modules.
xx7 and RIOs:	The firmware reads in the values according to the configuration (I/O Builder or network configurator)

Watchdog: This module can be used on all base addresses; there is no interaction with the watchdog on the CPUs. For details, please refer to the "Watchdog" section, which describes the correct use of the watchdog in conjunction with PCD2 components.

6.10 Analogue output modules

PCD2.W400	**4 analogue outputs 8 bit, 0...10 V**
PCD2.W410	**4 analogue outputs 8 Bit, 0…10 V, 0…20 mA, 4…20 mA *)**
PCD2.W600	**4 analogue outputs 12 bit, 0...10 V**
PCD2.W610	**4 analogue outputs 12 Bit, 0…10 V, 0…20 mA, 4…20 mA, Pt/Ni 1000 *)**

*) jumper selectable

! I/O modules and I/O terminal blocks may only be plugged in and removed when the PCD and the external +24 V are disconnected from the power supply.

6.10.1 PCD2.W4x0, analogue inputs, 4 channels, 8 bit resolution

Application

High-speed output module with 4 output channels of 8 bits each. Different output signals can be chosen with the aid of jumpers. Suitable for processes in which a large number of actuators have to be controlled, such as in the chemical industry and building automation.

Module overview

PCD2.W400: Single signal module with 4 output channels of 8 bits each. 0…10 V

PCD2.W410: General purpose module with 4 output channels of 8 bits each. Signals selectable for 0…10 V, 0…20 mA or 4…20 mA.

Technical data

Number of output channels:	4, short circuit protected
Signal ranges:	W400 0…10 V W410 0…10 V*) } jumper 0…20 mA } selectable 4…20 mA } *) Factory setting
Resolution (digital representation):	8 bit (0…255)
Conversion time D/A:	< 5 µs
Load impedance:	for 0…10 V: ≥ 3 kΩ for 0…20 mA: 0…500 Ω for 4…20 mA: 0…500 Ω
Accuracy (of output value):	for 0…10 V: 1 % ± 50 mV for 0…20 mA: 1 % ± 0.2 mA for 4…20 mA: 1 % ± 0.2 mA
Residual ripple:	for 0…10 V: < 15 mVpp for 0…20 mA: < 50 µApp for 4…20 mA: < 50 µApp
Temperature error:	typically 0.2 %, (over temperature range 0…+55 °C)
Burst protection: (IEC 801-4)	± 1 kV, with unshielded cables ± 2 kV, with shielded cables
Internal current consumption: (from +5 V bus)	1 mA
Internal current consumption: (from V+ bus)	30 mA
External current consumption:	max. 0.1 A (type PCD2.W410 only, for current outputs)
Terminals:	Pluggable 10-pole screw terminal block (4 405 4847 0), for wires up to 1.5 mm²

Connections

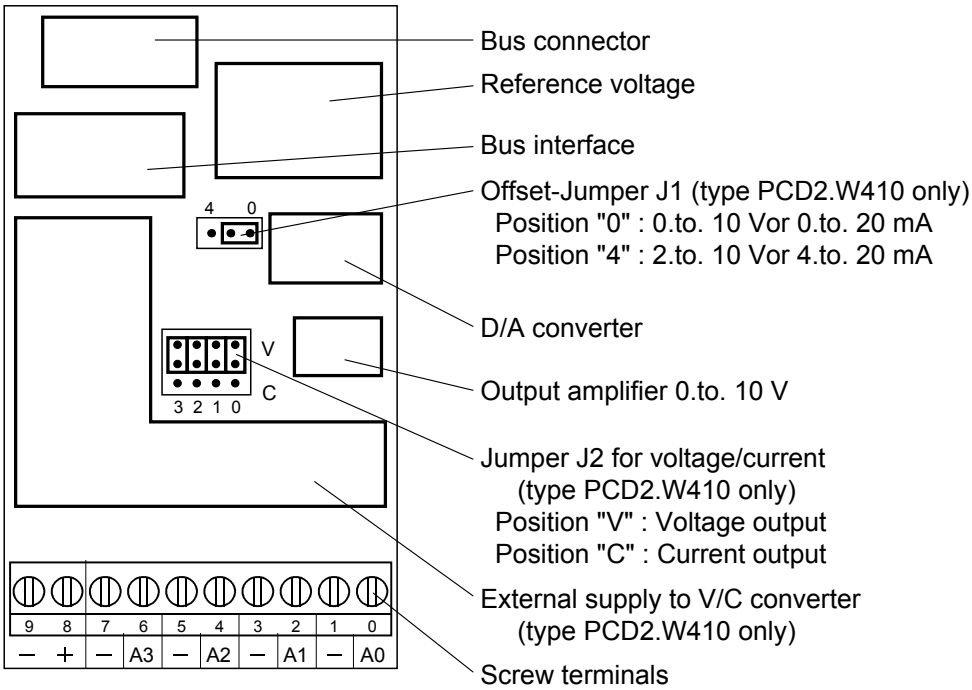

Analogue/digital values and jumper positions

Jumper "V/C"			V	C	C
Jumper "0/4"			0	0	4
Signal range			0…10 V	0…20 mA	4…20 mA
Digital values					
Classic	xx7	Simatic			
255	**255**	**27648**	10.0 V	20 mA	20 mA
128	**128**	**13824**	5.0 V*)	10 mA*)	12 mA*)
0	**0**	**0**	0	0	4 mA

*) The exact values are 1/255 higher

Changing the jumpers

On this circuit board there are components that are sensitive to electrostatic discharges. For further information, refer to Appendix B, "Icons"

Connection concept
Connection for 0…10 V

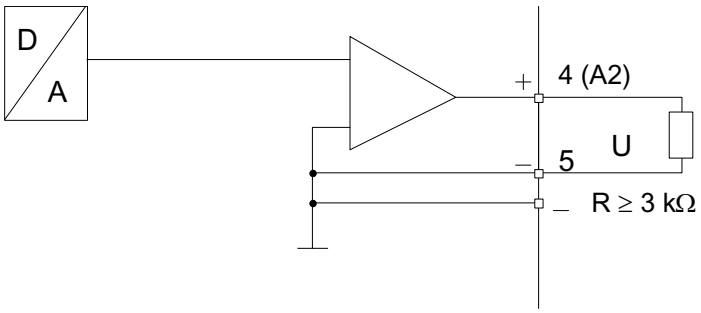

Connection for 0…20 mA or 4…20 mA
(selectable with jumpers on type PCD2.W410)

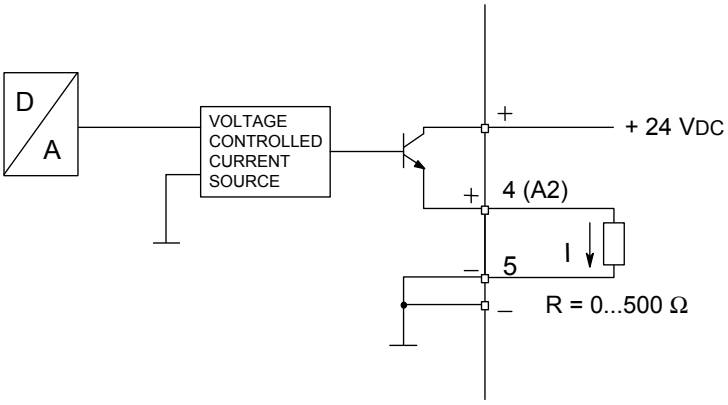

An external 24 VDC supply is required for current outputs

6

Block diagram

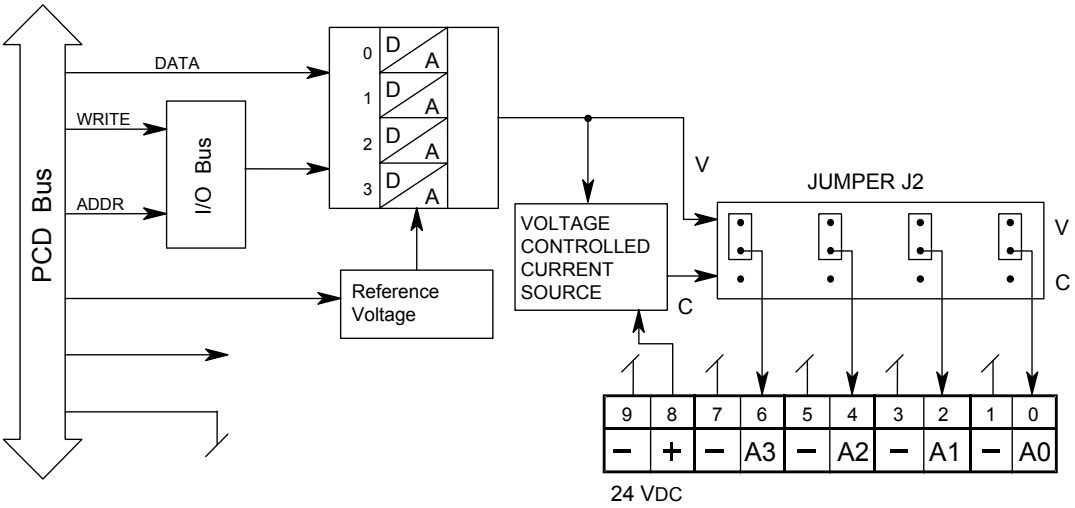

Programming

Classic: Programming examples for the PCD2.W4x0 can be found on the TCS Support site ((www.sbc-support.ch + getting started).

xx7: The firmware writes the values according to the configuration (I/O Builder)

Watchdog: This module cannot be used on the base address 240, because it would interact with the watchdog, and would cause a malfunction.

For details, please refer to the "Watchdog" section, which describes the correct use of the watchdog in conjunction with PCD2 components.

6.10.2 PCD2.W6x0, analogue outputs, 4 channels, 12 bit resolution

Application

High-speed output module for general use with 4 channels, each with 12 bit resolution. Variants for voltage 0…+10 V, -10 V…+10 V, current 0…20 mA.

Module overview

PCD2.W600:	Unipolar voltage outputs	0…10 V
PCD2.W610:	Bipolar voltage outputs to unipolar voltage	-10 V…+10 V, switchable 0…10 V / current 0…20 mA

Technical data **Resolution**

Number of output channels:	4, short circuit protected			
Signal range:	W600:	0…+10 V	2.442 mV	
	W610:	-10 V…+10 V	4,884 mV	selectable
		0…+10 V	2,442 mV	selectable
	with	0..20 mA	4,884 µA	selectable
Galvanic separation:	no			
Resolution (digital representation):	12 bit (0…4095)			
Conversion time D/A:	typ. 10 µs			
Load impedance	Voltage:	> 3 kΩ		
	Current:	< 500 Ω		
Accuracy at 25°C (of output value)	Voltage:	± 0.5 %		
	Current:	± 0.8 % *)		
Temperature error:	Voltage:	± 0.1 % (over temperature range		
	Current:	± 0.2 % 0…+55 °C)		
Internal current consumption: (from +5 V bus)	W600: W610:	max. 4 mA max. 110 mA		
Internal current consumption: (from V+ bus)	W600: W610:	max. 20 mA 0 mA		
External current consumption:	max. 100 mA	(type PCD2.W610 only, for current outputs)		
Terminals:	Pluggable 10-pole screw terminal block (4 405 4847 0), for wires up to 1.5 mm²			

*) Note on current outputs:
Since for some applications it is important to be able to reach the outside limit values of the range (0 mA, 20 mA), current outputs have been laid out according to the following characteristic line:

During start-up, a voltage of 5 V is sent to all outputs of the W600 module. The start-up phase lasts 40 ms, then 0 V is sent to the outputs.

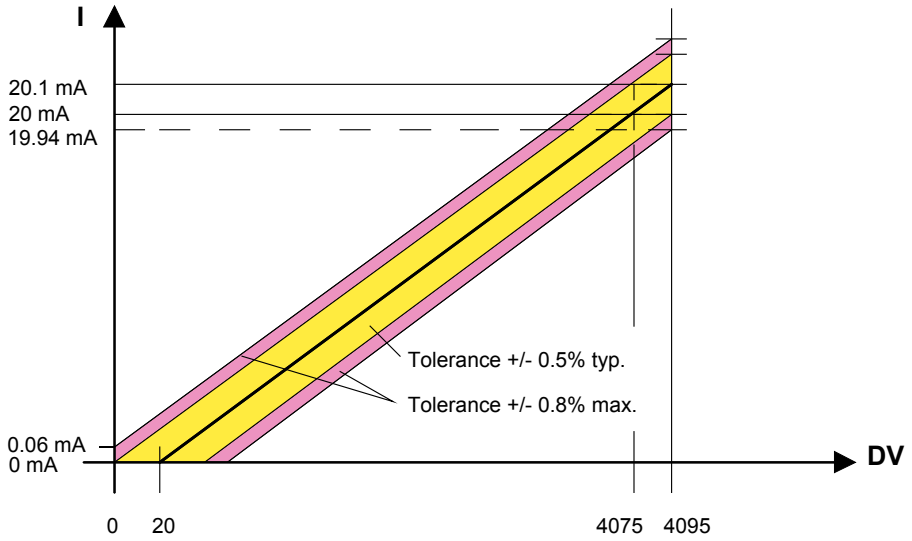

Terminals

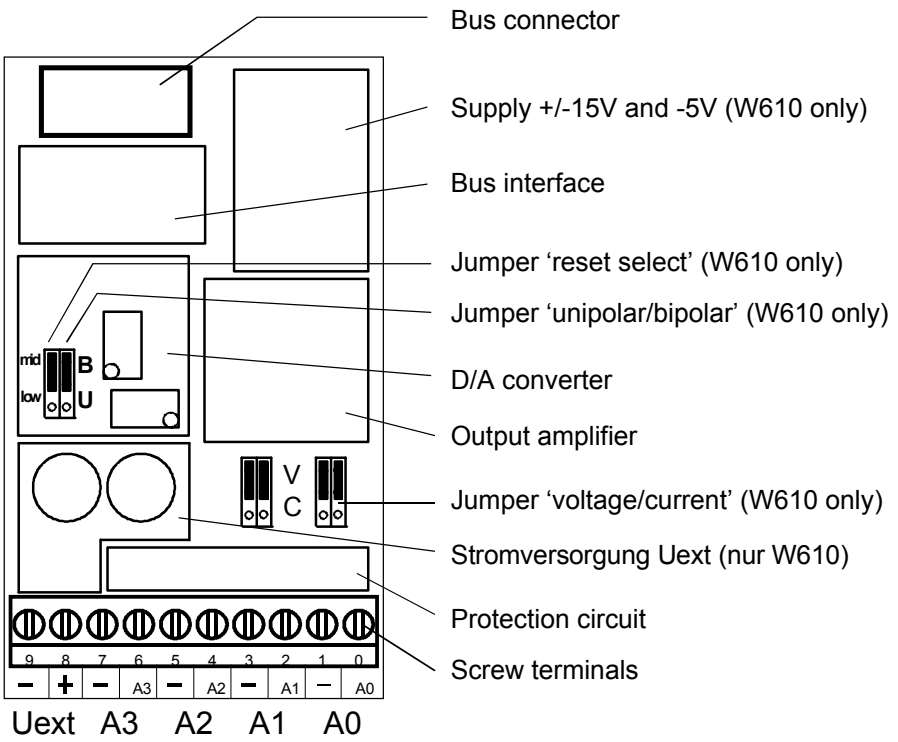

Digital/analogue values

Digital values			Output signals
Classic	**xx7**	**Simatic**	
4095	4095	27648	+20.1 mA
4075	4075	27513	+20 mA
2048	2048	13824	+10 mA
20	20	135	0 mA
0	0	0	0 mA

Changing the jumpers

There are components on this circuit board, that are sensitive to electrostatic discharges. For further information, refer to Appendix B, “Icons”.

Range selection (PCD2.W610)

Jumpers, factory settings:	A0…A3:	“V”	(voltage)
	U/B:	“B”	(bipolar)
	Reset select:	“mid“	(reset to mid-scale, i.e. 0 V in bipolar mode)

Ranges depending on application:

Per module: U/B:			**U**nipolar or **B**ipolar operation
	Reset select:		Reset to **low-** or **mid-**scale
	Rec. setting:		Unipolar →low-scale Bipolar → mid-scale
Per channel:		“V”	Voltage output: 0…+10 V or -10 V…+10 V
		“C”:	Current output: 0…20 mA

Current outputs have been laid out for unipolar mode. Bipolar mode is possible, but for the negative half of this operation the output is 0 mA.

Connection concept

Connection for 0…10 V or -10 V…+10 V: (selectable on the PCD2.W610)

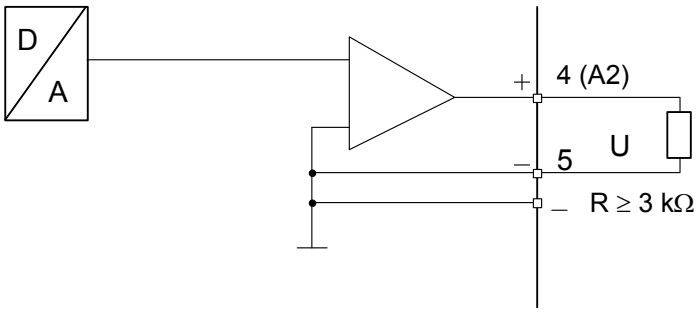

Connection for 0…20 mA: (PCD2.W610 only)

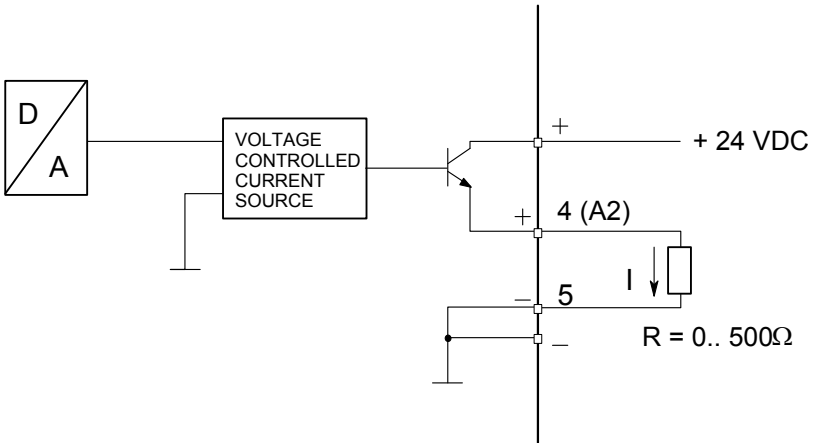

An external 24 VDC supply is required for current outputs.

Block diagram

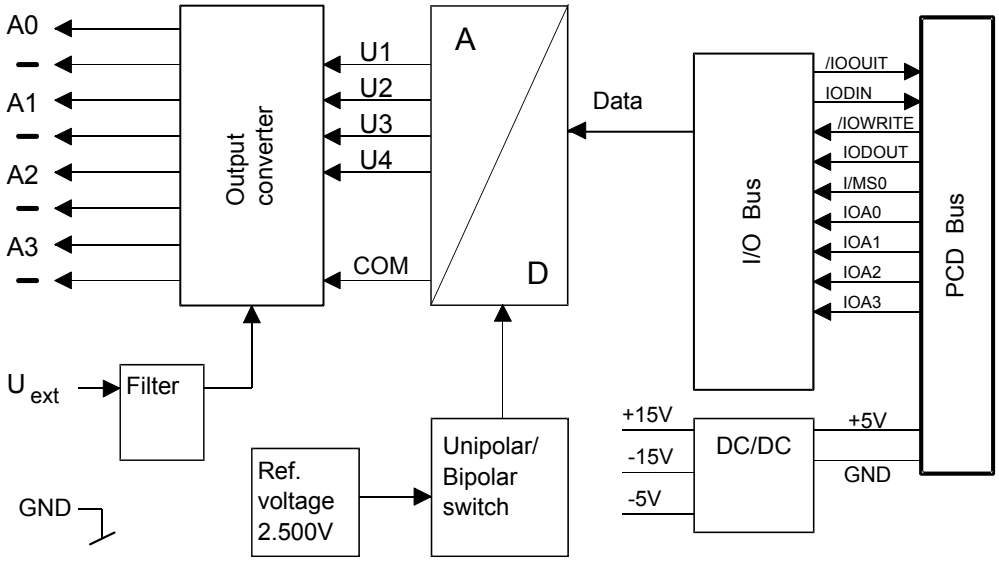

Programming

Classic: Programming examples for the PCD2.W6x0 can be found on the TCS Support site (www.sbc-support.ch + getting started). the firmware writes the values according to the configuration (I/O Builder)

Watchdog: This module cannot be used on the base address 240, because it would interact with the watchdog, and would cause a malfunction.

For details, please refer to the "Watchdog" section, which describes the correct use of the watchdog in conjunction with PCD2 components.

6.11 Analogue output modules, electrically isolated

PCD2.W605	**6 analogue outputs 10 bit resolution, 0..10 V**
PCD2.W615	**4 analogue outputs 10 bit resolution, 0..10 V**
PCD2.W625	**6 analogue outputs 10 bit resolution, 0..10 V**

Galvanic separation of outputs to PCD, channels themselves not separated

I/O modules and I/O terminal blocks may only be plugged in and removed when the PCD and the external +24 V are disconnected from the power supply.

6.11.1 PCD2.W6x5, analogue outputs, electrically isolated, 6 (4) channels, 10 bit resolution

Application

High-speed output module for general use, electrically isolated, 6 (4) channels, each with 10 bit resolution. Different variants for voltage 0..10 V, -10 V...+10 V and current 0..20 mA are available.

Module overview		Channels	Resolution
PCD2.W605:	Voltage 0..10 V	6 (O0…O5)	10 mV
PCD2.W615:	Current 0...20 mA	4 (O0…O3)	20 µA
PCD2.W625:	Voltage -10..10 V	6 (O0…O5)	20 mV

Technical data

Output ranges:	see module overview
Galvanic separation:	500 V, electrical isolation of outputs to PCD, channels themselves not separated
Resolution (digital representation):	10 bit (0…1023)
Load resistance:	W605: >3 kΩ W615: <500 Ω* W625: >3 kΩ
Accuracy at 25°C	W605: ± 0.4 % W615: ± 0.7 % W625: ± 0.4 %
Temperature error (0…+55 °C)	± 0.25 %, 100 ppm/K or 0.01 %/K
Short circuit protection:	yes (permanent)
EMC protection:	acc. to standards ENV 50141, EN 55022, EN 61 000-4-2, EN 61 000-4-4, EN 61 000-4-5
Time constant of output filter:	W605: typ. 1 ms W615: typ. 0.3 ms W615: typ. 1 ms
Internal current consumption: (from +5 V bus)	W605: 110 mA (typ. 80 mA) W615: 55 mA (typ. 45 mA) W625: 110 mA (typ. 80 mA)
Internal current consumption: (from V+ bus)	W605/W625: 0 mA W615: 90 mA
External current consumption:	max. 90 mA, smoothed Voltage range: RL•20 mA + 10…20 V *e.g. RL=500 Ω → Ue = 20…30 V RL=0 Ω → Ue=10…20 V
Terminals:	Pluggable 14-pole spring terminal block (4 405 4998 0), for Ø up to 1.5 mm²,

Connections

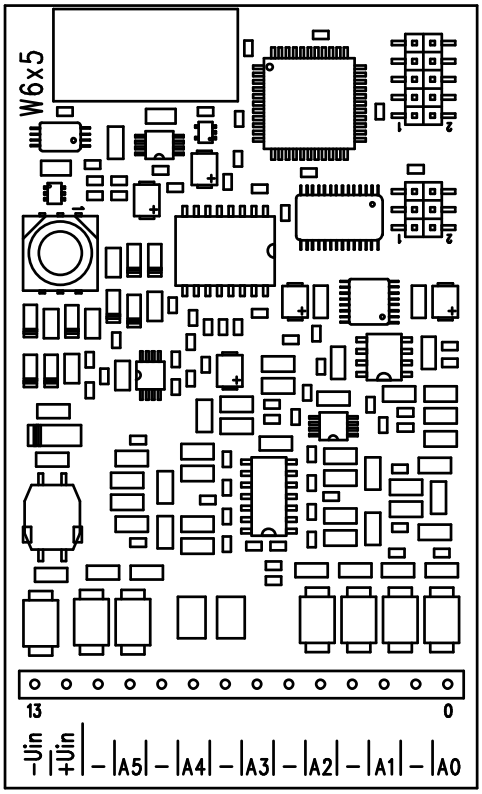

Digital/analogue values

Output signals and type			Digital values		
PCD2.W605	**PCD2.W615**	**PCD2.W625**	**Classic**	**xx7**	**Simatic**
+ 10.0 V	+ 20 mA	+10 V	1023	1023	27684
+ 5.0 V	+ 10 mA	0 V	512	512	13842
	+ 4 mA		205	205	5530
0 V	0 mA	-10 V	0	0	0

Notes on the output range

Balancing the offset and the amplification is done for the PCD2.W6x5 digitally by the µC. As there is no potentiometer, the output range has been slightly enlarged to cover maximum values even in the worst case.

Typical output range (without component tolerances):
W605: - 0.26 V…+ 10.36 V (instead of 0…+ 10 V)
W615: - 0 mA…+ 21.4 mA (instead of 0…+ 20 mA)
W625: - 10.62 V … 10.36 V (instead of - 10…+10 V)

This range is broken down on a 10 bit scale (1024 steps), as before. The result is the following LSB resolution:
W605: 1 LSB = 10.38 µV
W615: 1 LSB = 21.7 µA
W625: 1 LSB = 20.75 µV

With this balance the nominal range (0...10 V) is now scaled 0...1023, making it possible for the output value not to change on an increase of 1 LSB.

In the FBs the output values are not limited to 0...1023, so the whole range of the module can be used.

For voltages > 10 V or currents > 20 mA, values >1023 may be output, and for voltages < 0 V or < -10 V, negative values may be output. (With the W615 it is not possible to output negative currents).

This extended range does depend on the tolerances of the components, and cannot be guaranteed.

Connection concept for voltage and current inputs

The voltage and current output signals are connected directly to the 14-pole terminal block (O0 … O5 / O3 and -).

The following connection diagram shows a typical wiring layout for:

- voltage outputs with the PCD2.W605 and .W625 modules or
- current outputs for the PCD2.W615 module

Connection for 0..10 V (W605) or -10 V...+10 V (W625):

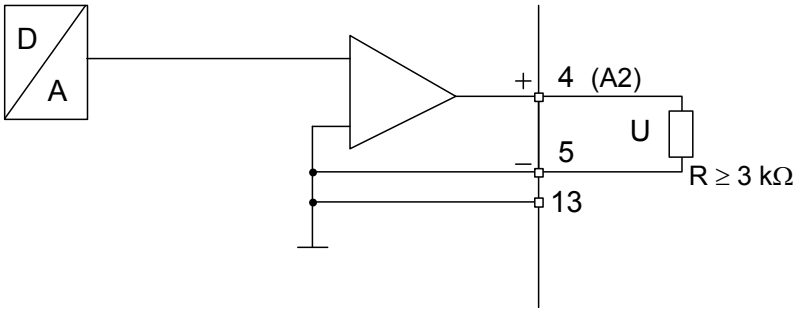

No external supply is needed for voltage outputs.

Connection for 0…20 mA(W615)

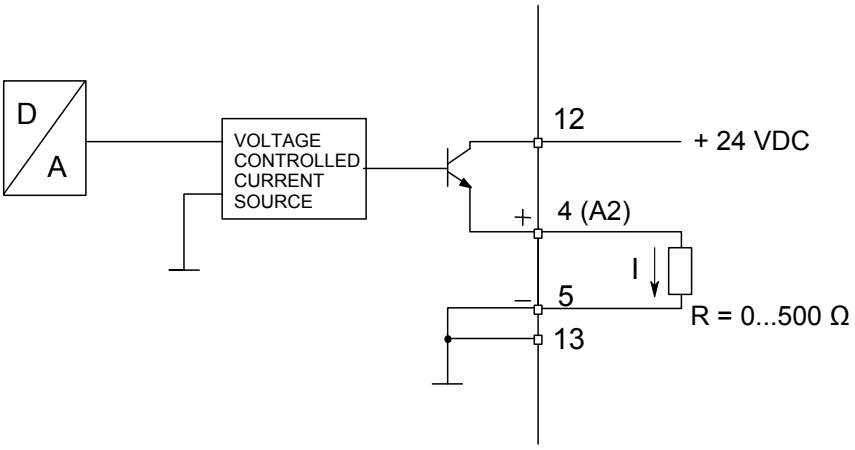

An external 24 VDC supply is required for current outputs.

Block diagram

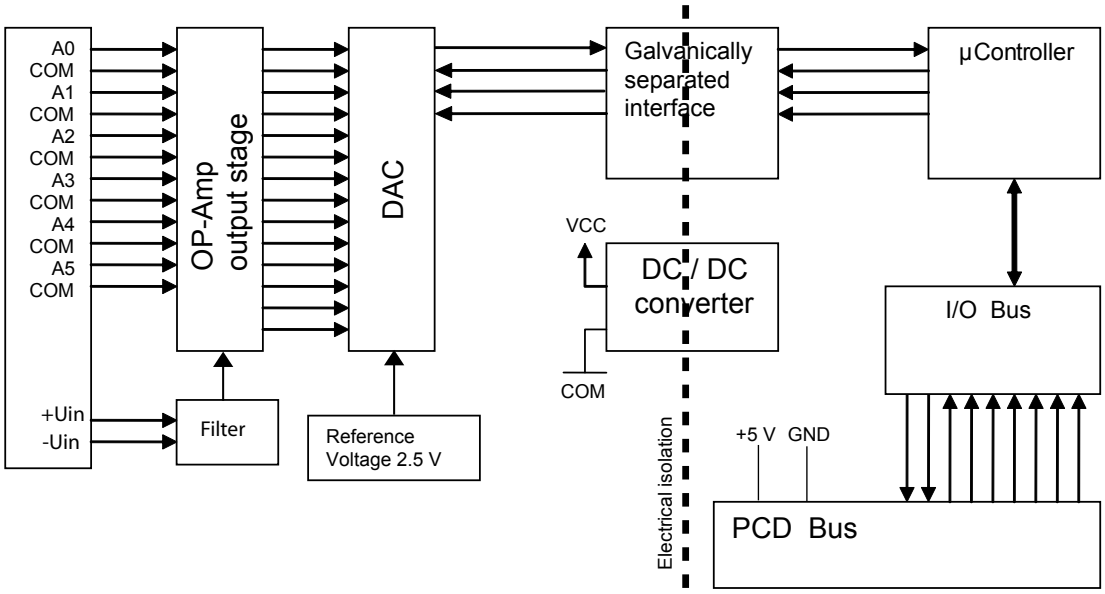

Programming

Classic: For programming the modules, an FBox is available.
xx7 and RIOs: The firmware reads in the values according to the configuration (I/O Builder or network configurator)

Watchdog: This module can be used on all base addresses; there is no interaction with the watchdog on the CPUs. For details, please refer to the "Watchdog" section, which describes the correct use of the watchdog in conjunction with PCD2 components.

6.12 Analogue combined input/output modules

PCD2.W525	**4 inputs,** **14 Bit, 0…10 V, 0(4)…20 mA, Pt 1000, Pt 500 or Ni 1000** **(selectable via DIP switch)** **and** **2 outputs,** **12 Bit, 0…10 V or 0(4)…20 mA** **(selectable via software (FBox, FB)**

Galvanic separation of outputs to PCD, channels themselves not separated

I/O modules and I/O terminal blocks may only be plugged in and removed when the PCD and the external +24 V are disconnected from the power supply.

6.12.1 PCD2.W525 analogue combined input/output module with electrical isolation

General information

The PCD2.W525 is an analogue multi-purpose module with four inputs and four outputs. Each input and output can be configured individually as an industry-standard interface of type 0…10 V, 0…20 mA und 4…20 mA. The inputs can also be configured in such a way that they can support Pt/Ni1000 or Pt500 temperature sensors. Various filter types and scaling ranges can also be used for the module.

Inputs, 14 Bit

- 4 inputs. Each channel has four operating modes (configurable with DIP switches)
  - ***Differential voltage inputs***
    0…10 V, resolution: 0.61 mV per LSB (14 Bit)
  - ***Differential current inputs*** - measured in differential mode
    0…20 mA, resolution: 1.2 µA per LSB (14 Bit)
    4…20 mA, resolution: 1.2 µA per LSB (13.7 Bit)
  - ***Temperature***
    Pt1000, -50…400 °C, resolution: 0.1 °C
    Pt500, -50…400 °C, resolution: 0.2 °C
    Ni1000, -60…200 °C, resolution 0.1 °C
  - ***Resistance***
    0…2500 Ω, resolution 0.2 Ω
- Each channel can be configured to have a software-based filter with 50 Hz/ 60 Hz

Outputs, 12 Bit

- 2 outputs. Each channel has three operating modes (configurable via software)
  - ***Voltage***
    0…10 V, resolution: 2.44 mV per LSB (12 Bit)
  - ***Current***
    0…20 mA, resolution: 4.88 µA per LSB (12 Bit)
    4…20 mA, resolution: 4.88 µA per LSB (11.7 Bit)
- ***High impedance:***

Miscellaneous

- All I/O channels are electrically isolated from the external power supply. (but all channels are electrically connected to each other).
- Each channel has two connections.

Configuration

Module connections/LEDs

The module connections are as follows:

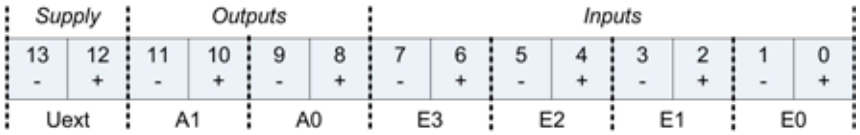

Description of LED:

- Off: No power supply to module. U_{ext} (24 V) absent.
- On: Module working correctly.
- Flashing slowly: Channel error (overload/underload/short circuit/ open load)
- Flashing quickly: U_{ext} lower than specified (< 19 V).

Configuration of inputs

Each input channel is configured via a DIP switch with four pins. The function of each pin is as follows:

Pin no.	*Off*	*On*
1	Differential mode	Single-ended mode
2		Current shunt resistance on
3		Supply to external resistors on
4	Gain=1	Gain=0,25

According to this table, the configuration of the various operating modes is as follows:

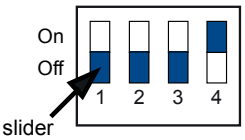

Voltage mode
0...10 V

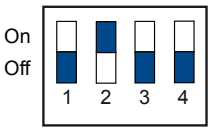

Current mode
0...20 mA
4...20 mA

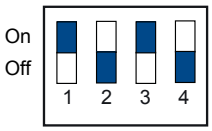

Temperature mode
Pt1000 (-50...400 ˚C)
Pt500 (-50...400 ˚C)
Ni1000 (-60...200 ˚C)
Resistor mode
0...2500 Ω

Configuration of outputs

As the outputs are configured using software (with the relevant FBox or FB), it is not necessary to configure the operating mode of the outputs using jumpers or DIP switches.

Function

Power supply

PCD2.W525s must have an external power supply. This power supply is electrically isolated from both the PCD and the inputs/outputs of the W525. The design also allows the use of the same power supply for the PCD and the W525 without losing the galvanic separation. The diagram below shows the various areas of separation:

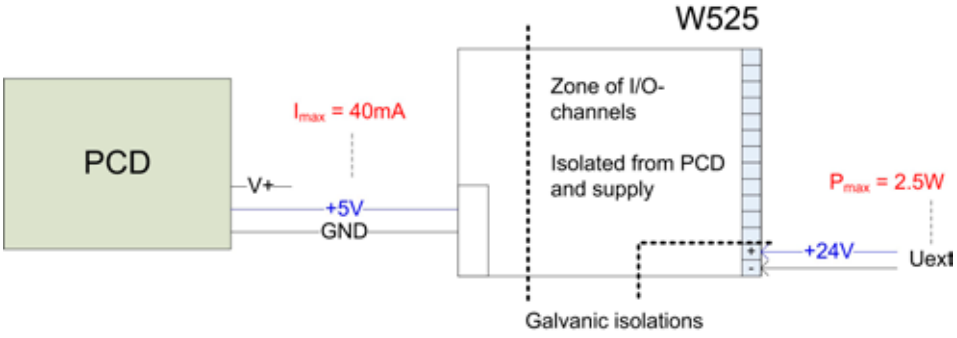

Timing

- **Inputs**
  - Internally, the W525 captures a new value for each input channel every 2 ms
  - This value can be read by the PCD at any time.
  - Depending on the speed of the PCD, the transmission time for each individual value scaled to 16 bit (for a single input channel) is normally 100 µs.
- **Outputs**
  - Internally, the W525 outputs the last output value received from the PCD with a maximum delay of 2 ms.
  - Depending on the speed of the PCD, the transmission time for each individual output value scaled to 16 bit is normally 100 µs.

Filters

- **Inputs**

  There are two factors used to filter the captured values:

  - The basic hardware filter with a time constant of 2 ms. This filter attenuates the input signal by 6 dB per order of magnitude at a switching frequency of 80 Hz.
  - The software also has an effect. This results in a delay to the captured value of 2 ms with a notch filter property at 500 Hz, where no software-based filter with 50 Hz/60 Hz has been selected.

  Where a 50 Hz (60 Hz) filter is used, the frequency of the notch filter is 50 Hz (60 Hz); in this case, the delay is also 2 ms.

- **Outputs**

  Only the hardware-based filer with a time constant of 1 ms is active.

Technical data

Inputs	
General:	
Resolution:	14 bit
Measurement type:	differential
Number of channels:	4
Galvanic separation of the PCD:	yes, 500 V
Galvanic separation of external supply:	yes, 500 V
Galvanic separation between channels:	no
Type of connections:	two cables per channel
Configuration of operating mode:	using DIP switches
Accuracy at 25 °C:	± 0.2% max.
Repeat accuracy:	± 0.05% max.
Temperature drift (0…55 °C) max.:	± 70 ppm/°C
Overvoltage protection:	± 50 V min.
Overcurrent protection:	± 35 mA min.
Common mode max. voltage:	± 50 V min.
Common mode rejection:	70 dB min.
Filter:	
Time constant for hardware filter:	2 ms
Attenuation of software-based 50 Hz filter:	40 dB min. between 49.5 and 50.5 Hz
Attenuation of software-based 60 Hz filter:	40 dB min. between 59.5 and 60.5 Hz
Voltage mode:	
Resolution range 0…10 V mode:	14 Bit; 0.61 mV per LSB
Current mode:	
Current shunt resistance:	125 Ω
Resolution range 0…20 mA:	14 Bit; 1.22 µA per LSB
Resolution range 4…20 mA:	13.7 Bit; 1.22 µA per LSB
Temperature / resistance mode:	
Resolution for Pt1000; range -50…400 °C	0.1 °C
Resolution for Pt500; range -50…400 °C	0.2 °C
Resolution for Ni1000; range -60…200 °C	0.1 °C
Resolution for resistor; range 0…2500 Ω	0,2 Ω
Shunt capacity for temp sensor / resistor:	2.5 mW max.

Outputs	
General:	
Resolution:	12 bit
Number of channels:	2
Galvanic separation of the PCD:	yes
Galvanic separation of external supply:	yes
Galvanic separation between channels:	no
Type of connections:	two cables per channel
Configuration of operating mode:	using software (FBOX, FB)
Accuracy at 25 °C:	± 0.5% max.
Repeat accuracy:	± 0.1% max.
Temperature drift (0…55 °C) max.:	± 70 ppm/°C
Overcurrent protection:	short circuit protected
Time constant for filter:	1 ms
Voltage mode:	
Max. load to maintain specified accuracy:	> 700 Ω
Resolution range 0…10 V:	12 Bit; 2.44 mV per LSB
Current mode:	
Operating resistance:	< 600 Ω
Resolution range 0…20 mA:	12 Bit; 4.88 µA per LSB
Resolution range 4…20 mA:	11.7 Bit; 4.88 µA per LSB
General details	
Current consumption at I/O bus +5V:	max. 40 mA
Current consumption at I/O bus V+:	no load
Temperature range:	0..0.55 °C
External power supply	
(The same power supply can be used as for the PCD without losing the galvanic separation of the inputs/outputs.)	
Operating voltage:	24 V ±4 V smoothed
Current consumption:	max. 2.5 W (depending on output load)
Terminals:	Plug-in 14-pole screw clamps (PCD2.W525; item no: 4 405 5002 0, supplied with module), for cables up to 1.5 mm²

6.13 Weighing modules

PCD2.W720	**2-channel weighing module for 4/6-wire weighing cells**

I/O modules and I/O terminal blocks may only be plugged in and removed when the PCD and the external +24 V are disconnected from the power supply.

6.13.1 PCD2.W720

The module PCD2.W720 is described in Manual 26/833.

6.14 General-purpose temperature modules

PCD2.W745	Thermocouple modules, 4-channel

Supported temperature sensors are:

- Thermocouples – TC type J,K
- Resistance thermometer (RTD) – RTD type Pt 100, Pt 1000, Ni 100, Ni 1000

I/O modules and I/O terminal blocks may only be plugged in and removed when the PCD and the external +24 V are disconnected from the power supply.

6.14.1 PCD2.W745

The PCD2.W745 module is described in Manual 26/796.

6.15 Fast counter modules

PCD2.H100	**Counter module up to 20 kHz**
PCD2.H110	**General purpose counting and measuring module up to 100 kHz**

I/O modules and I/O terminal blocks may only be plugged in and removed when the PCD and the external +24 V are disconnected from the power supply.

6.15.1 PCD2.H100, counting module up to 20 kHz

Application

Simple counting module, comprising two inputs "A" and "B" plus one direct control output marked “CCO”; allows counting of the number of revolutions or the calculation of distances (pulses) and the measurement by counting of pulses within a logical AND gate (second input)

Typical areas of application:

- Counting revolutions or distances (impulses)
- Presetting a count value and switching off output CCO when Counter = 0
- Measurement by counting: measuring signals counted only when particular conditions are met, e.g. photoelectric barrier covered
- Counting with recognition of count direction for incremental shaft encoders providing simple motion control

Technical data

Number of systems:	1
Counting range:	0…65,535 (16 bit) (can be extended with CPU counters)
Counting frequency:	max. 20 kHz (at pulse/pause ratio 50%)
Data protection:	All data in this module are volatile (non-volatile PCD registers are available).
Digital inputs	
“IN-A” and “IN-B” signal voltages:	Nominal voltage: 24 VDC “low" range: -30…+5 V “high" range: +15…30 V for source operation
Input current:	typically 7.5 mA
Input filer:	25 kHz
Process output	
Counter controlled output CCO:	counter output (switches when count is 0 or 65,535)
Current range:	5…500 mA (max. current leakage 1 mA) (min. load resistance 48 Ω in voltage range 5..24 V).
Voltage range:	532 VDC smoothed, max. 10% ripple
Circuit type:	Electrically coupled, not short circuit protected, positive switching
Voltage drop:	typically 2V at 500 mA
Output delay:	< 10 µs, (longer for inductive load due to protective diode).
Power supply	
External supply	5…32 VDC, (for supply to CCO output only)
Internal current consumption: (from +5 V bus)	max. 90 mA
Internal current consumption: (from V+ bus)	0 mA
External current consumption:	CCO output load current
Operational conditions	
Ambient temperature	operation: 0…+55 °C without forced ventilation, Storage: -20…+85 °C
Noise immunity:	CE mark acc. to EN 61 000-6-3 and EN 61 000-6-2

Programming:	Based on PCD user program and pre-programmed function blocks (FB).
Count modes:	Selectable with jumper
Terminals:	Pluggable 10-pole screw terminal block (4 405 4847 0), for wires up to 1.5 mm²

LEDs and connection terminals

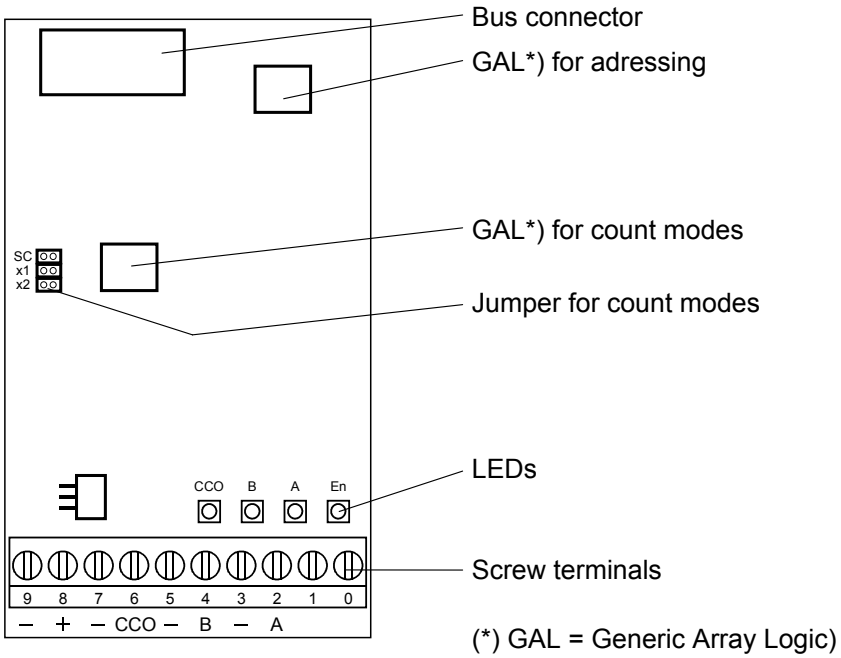

“A”	Input “A”	1
“B”	Input “B”	2
“En” (Enable)	Counter active	0
“CCO”	Output “CCO”	3

Changing the jumpers

On this circuit board there are components that are sensitive to electrostatic discharges. For further information, refer to Appendix B, "Icons"

Count modes

SC (Single Count):

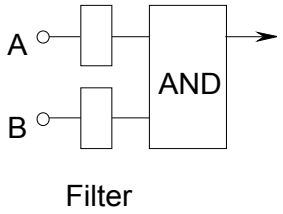

Counting signals at input A.
Up and down counting selectable by user program.

To enable signals at input A to be counted, input B must be connected to 24 V (AND gate).

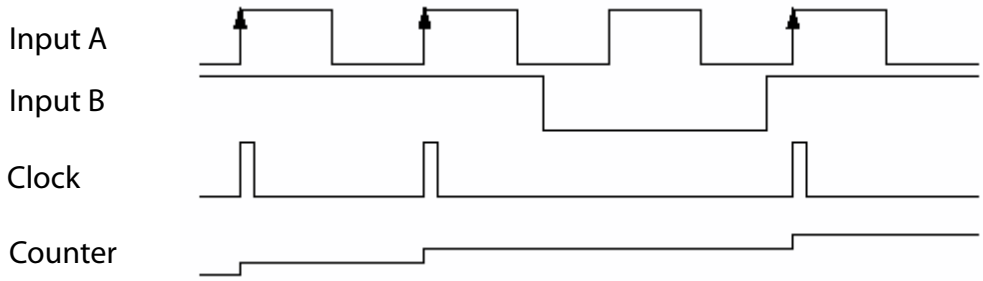

Modes x1, x2: Up/down counting mode for 2-phase incremental shaft encoder at inputs A and B.

x1

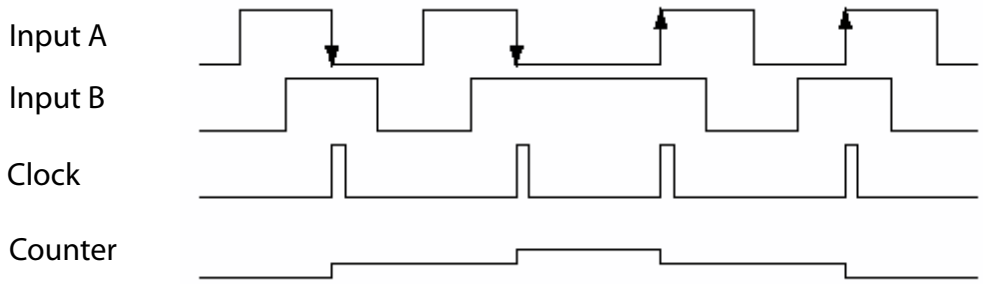

x2

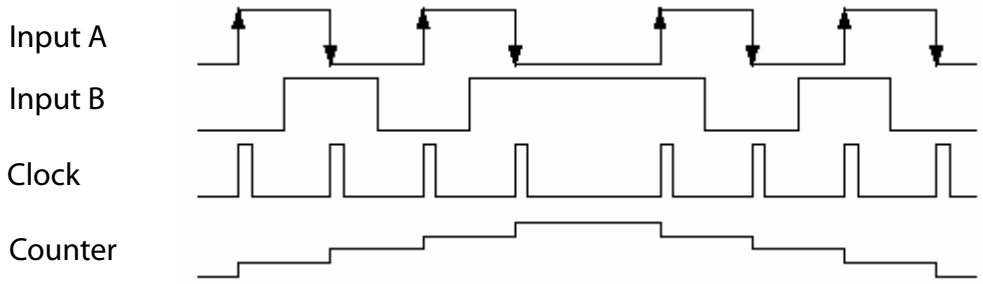

Block diagram

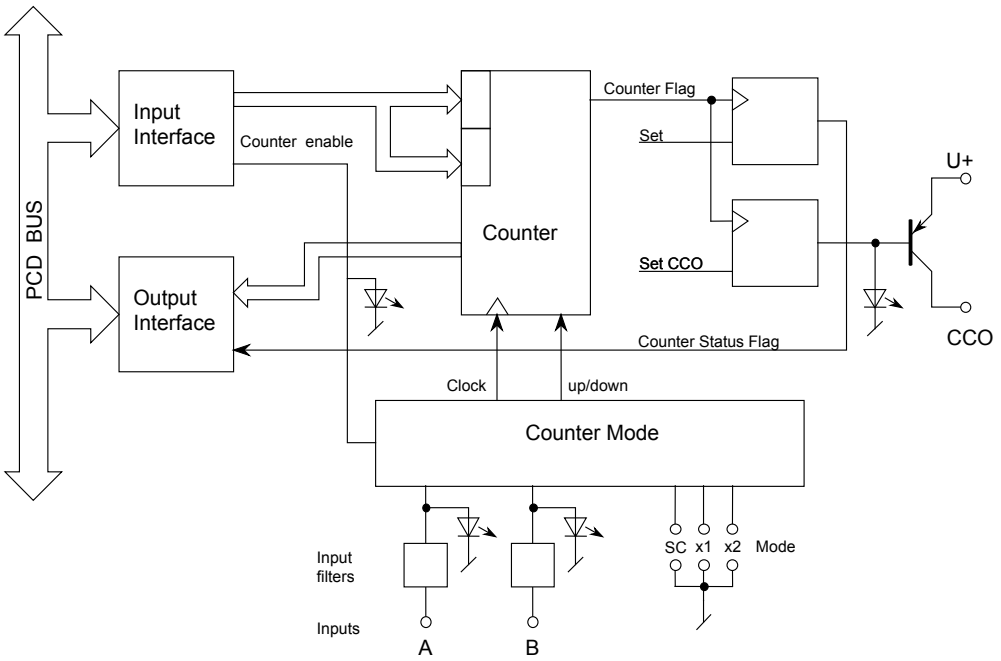

Operating principle

This can be largely derived from the block diagram. It is only necessary to add some explanation about the counter output circuit:

The output of the internal counter is identified as “Counter Flag”. The user has no hardware access to it. This counter flag is set to “1” whenever the counter is loaded or by means of a separate instruction.

The flag is set to “0” in up-counting mode: when counter value 65,535 is reached
in down-counting mode: when counter value 0 is reached

To reset a CCO hardware output which had previously been set high by the user program, it is necessary to differentiate between two cases:

a) count range between 0...65,535 (normal case)
b) count range exceeding 65,535

Case a): Resetting the counter flag results in a simultaneous reset of the CCO output.

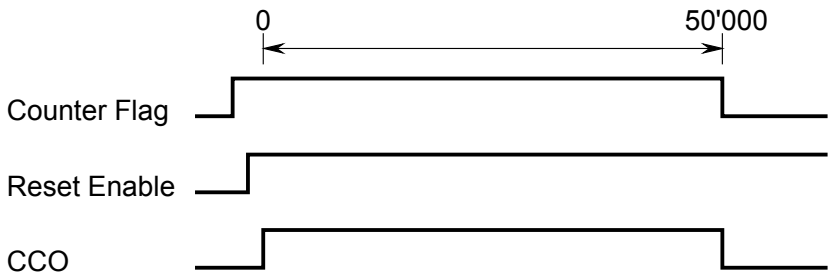

The “Reset-Enable” should be activated **before** the counter reaches zero.

Case b): If the count range has to extend beyond the value 65,535, “Reset Enable” can be activated later, i.e. between the penultimate and the last time the counter reaches zero. This means that the CCO output is only reset after several passes of the counter. The number of passes is counted by a CPU counter.

For example, output CCO should be switched off after 200,000 count signals.

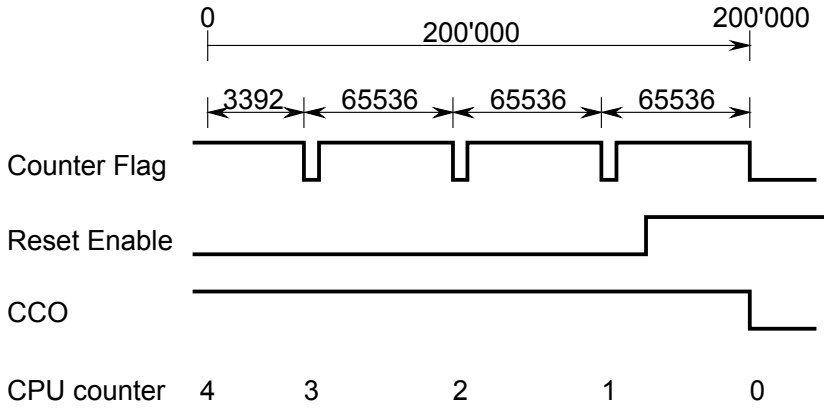

Programming

Classic: Programming examples for the PCD2.H100 can be found in a separate manual and on the TCS Support site (www.sbc-support.ch + getting started).
xx7: The firmware reads in the values according to the configuration (I/O Builder)

Watchdog: This module cannot be used on the base address 240, because it would interact with the watchdog, and would cause a malfunction.

For details, please refer to the "Watchdog" section, which describes the correct use of the watchdog in conjunction with PCD2 components.

6.15.2 PCD2.H110, general purpose counting and measuring module up to 100 kHz

Application

Measuring and fast counting module for general counting and simple motion control tasks; also for specific applications such as frequency measurement, period and pulse length measurement, etc. The module is equipped with an FPGA (Field Programmable Gate Array) and can be programmed for special high volume applications by using a plug-in PROM.

Technical data

Number of systems:	1
Counting range:	0…16,777,215 (24 Bit)
Counting frequency:	up to 100 kHz
Data protection:	All data in this module are volatile (non-volatile PCD registers are available).
Digital inputs	
Number of inputs: Terminal 0 = I0 Terminal 1 = I1 Terminal 2 = I2 Terminal 3 = I3	4 Input “A”: for counting and measuring Input “B”: for counting only Input En"C”: for use as counting module Input En"M”: for use as measuring module
Nominal voltage:	24 VDC “low" range: -30…+5 V “high" range: +15…30 V for source operation
Input current:	typically 6.5 mA
Input filer:	150 kHz
Circuit type:	electrically connected
Digital outputs	
Number: Terminal 4 O0: Terminal 5 O1:	2 Output “CCO” (for counter) Output “TCO” (for measuring functions)
Current range:	5…500 mA (max. current leakage 1 mA) (min. load resistance 48 Ω in voltage range 5..24 V).
Frequency:	≤ 100 kHz
Voltage range:	532 VDC smoothed, max. 10% ripple
Circuit type:	Electrically coupled, not short circuit protected, positive switching
Voltage drop:	typically < 0.5 V at 500 mA
Output delay:	< 1 µs, (longer for inductive load due to protective diode).
Power supply	
External supply	5…32 VDC, (for supply to CCO output only)
Internal current consumption: (from +5 V bus)	max. 90 mA
Internal current consumption: (from V+ bus)	0 mA
External current consumption:	max. 2 A (all outputs)
Operational conditions	
Ambient temperature	operation: 0…+55 °C without forced ventilation, Storage: -20…+85 °C
Noise immunity:	CE mark acc. to EN 61 000-6-3 and EN 61 000-6-2

Programming:	Based on PCD user program and pre-programmed function blocks (FB).
Terminals:	Pluggable 10-pole screw terminal block (4 405 4847 0), for wires up to 1.5 mm²

LEDs and connection terminals

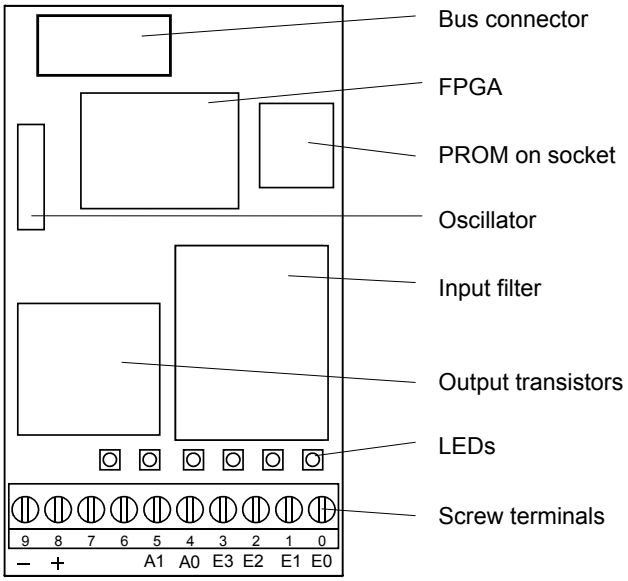

LED 0	State of input “A”
LED 1	State of input “B”
LED 2	State of input “EnableC”
LED 3	State of input “EnableM”
LED 4	State of output “CCO”

Block diagram

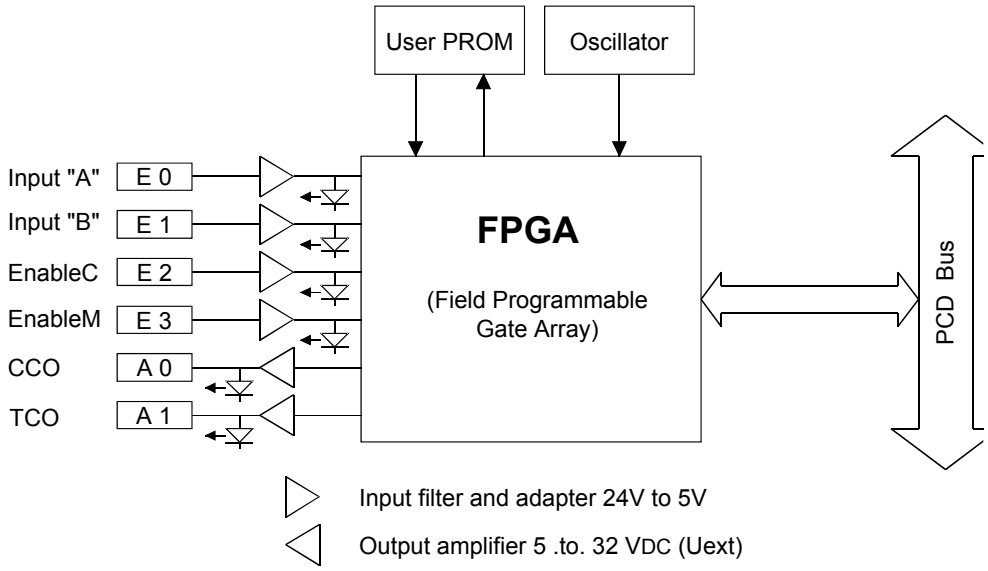

For further details, please refer to manual 26/755 "PCD2.H110 - Universal counting and measuring module".

Watchdog: This module cannot be used on the base address 240, because it would interact with the watchdog, and would cause a malfunction. For details, please refer to the "Watchdog" section, which describes the correct use of the watchdog in conjunction with PCD2 components.

6.16 SSI encoder module

PCD2.H150	**SSI interface module**

I/O modules and I/O terminal blocks may only be plugged in and removed when the PCD and the external +24 V are disconnected from the power supply.

6.16.1 PCD2.H150, SSI interface module for absolute encoder

Application

The PCD2.H150 module is an interface module for the SSI standard. (SSI = Synchronous Serial Interface). The SSI standard is used with most absolute encoders. Details of SSI specifications can be obtained from the STEGMANN company's brochure: "SSI-Technical Information".

The hardware consists of an RS422 port for the SSI interface and 4 general-purpose digital outputs. Functionality is provided by an FPGA (field programmable gate array).

Technical data

Resolution:	configurable for 8..29 data bits and 0..2 control bits
Clock frequency:	configurable for 100 kHz, 200 kHz, 300 kHz and 500 kHz (input filter designed for 500 kHz)
Frequency has to be selected depending on cable length:	Cable length Frequency < 50 m max. 500 kHz < 100 m max. 300 kHz < 200 m max. 200 kHz < 400 m max. 100 kHz
Data code:	configurable - Gray or binary
Read mode:	Normal (single read). Ring mode: 'double read and compare' (not all encoders support this function)
Offset position:	An offset can be defined when initializing the PCD2.H150. The defined offset is always subtracted in the FBs. The 'Set Zero' command also uses this offset register.
Execution time:	typically 1.5 ms for reading the SSI value
Cable break detection:	detected with the FB 'timeout' (10 ms)
Flags	for cable break, encoder fault or incorrect addressing) 'fPar_Err', (if a wring FB parameter is sent) 'fRing_err' (if compare error in 'double read')
SSI interface	
1 input for SSI data	RS422, electrically isolated
1 output for SSI clock	RS422, electrically connected, as the encoder input is normally isolated
Digital outputs	
Number of outputs: Terminal 4 = O12: Terminal 5 = O13: Terminal 6 = O14: Terminal 7 = O15:	4 Speed high Speed low Dir + positive direction Dir - negative
Switching capacity:	0.5 A each in the range 10…32 VDC, ripple max. 10 %
Short circuit protection:	yes, I_{max}=1.5 A
Electrical isolation:	no
Voltage drop:	max. 0.3 V at 0.5 A
Circuit type:	positive switching
Output delay:	typically 50 µs, max. 100 µs, ohmic load
Power supply	
Internal current consumption: (from +5 V bus)	25 mA
Internal current consumption: (from V+ bus)	0 mA
External current consumption:	For all outputs max. 2 A, ripple max. 10 %

Operational conditions	
Ambient temperature	Operation: 0…+55 °C without forced ventilation, Storage: -20…+85 °C
Noise immunity:	CE mark acc. to EN 61 000-6-3 and EN 61 000-6-2
Programming:	Based on PCD user program and pre-programmed function blocks (FB).
Terminals:	Pluggable 10-pole screw terminal block (4 405 4847 0), for wires up to 1.5 mm²

LEDs and connection terminals

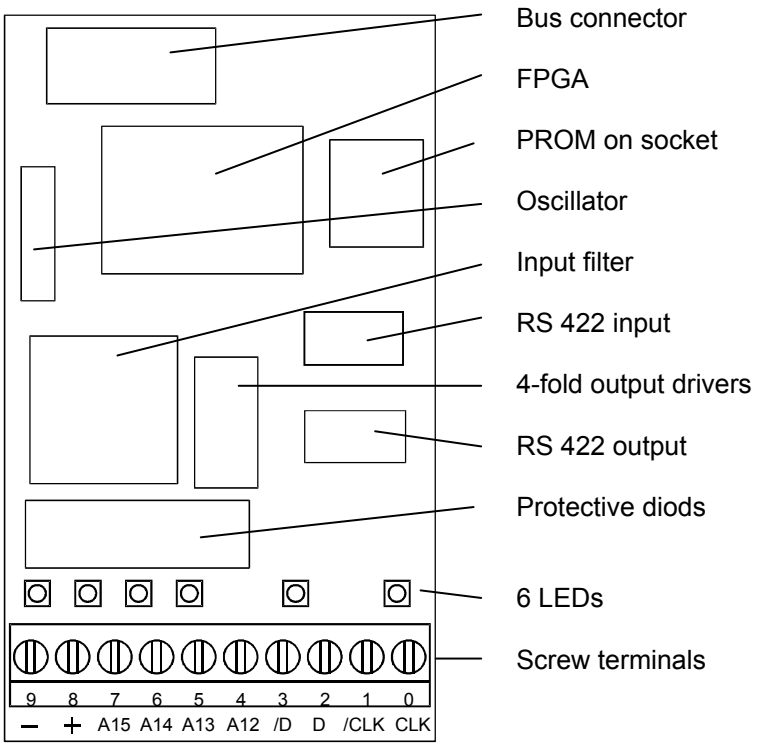

LED 0: SSI output ‘Clock’
LED 2: SSI input ‘Data’
LED 4: State of output 12
LED 5: State of output 13
LED 6: State of output 14
LED 7: State of output 15

Block diagram

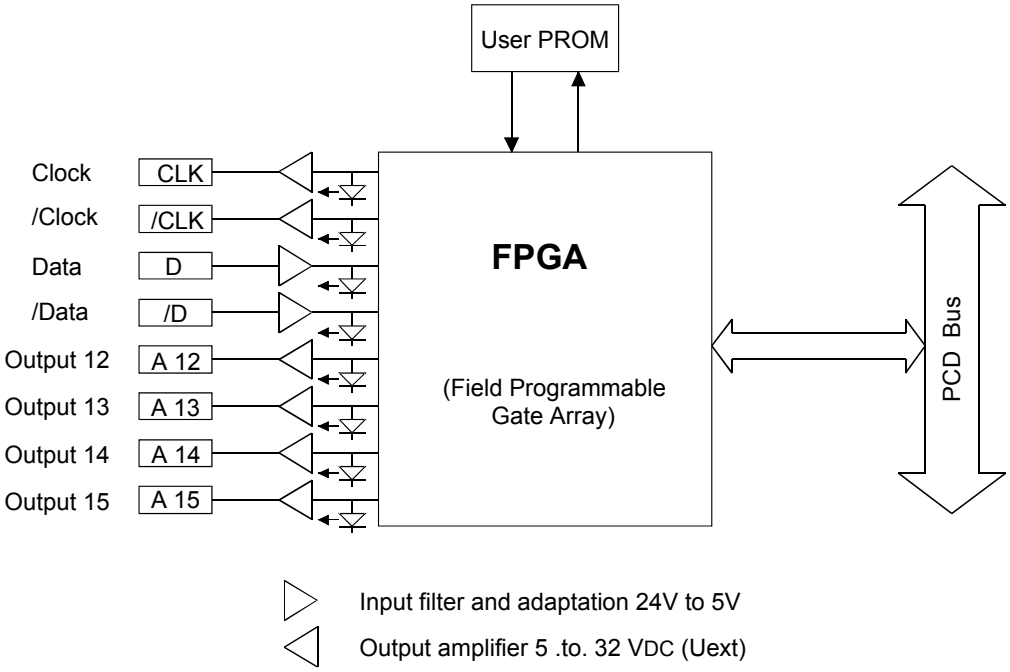

For further details, please refer to manual 26/761 "PCD2.H150 - SSI interface for absolute encoder".

Watchdog: This module cannot be used on the base address 240, because it would interact with the watchdog, and would cause a malfunction.

For details, please refer to the "Watchdog" section, which describes the correct use of the watchdog in conjunction with PCD2 components.

6.17 Motion control modules for stepper motors

PCD2.H210	Motion control module for stepper motors

I/O modules and I/O terminal blocks may only be plugged in and removed when the PCD and the external +24 V are disconnected from the power supply.

6.17.1 PCD2.H210, Motion control module for stepper motors

Application

The PCD2.H210 module provides fully autonomous control and monitoring of stepper motor travel, with run-up and braking ramps. The commands for stepper motor motion cycles are transmitted to the module by function blocks in the user program.

During motion, the SM processor monitors the frequency profile and the acceleration and braking ramps to move the axis to the destination position without loss of steps. Each module controls an independent axis. The module supplies a monophase pulse string which is conveyed to a suitable electronic drive. The module has 4 inputs and 4 outputs.

Technical data

Number of axes:	1
Positioning distance (counting range):	0…16,777,215 (24 Bit)
Frequency ranges (selectable) *):	9.5…2,431 Hz 19…4,864 Hz 38…9,727 Hz 76…19,454 Hz
Acceleration *):	0.6…1224 kHz/s, non-linear range division, dependent on selected frequency range
Profile generator:	with symmetrical acceleration and braking ramps
Data protection:	All data in this module are volatile (non-volatile PCD registers are available).
Digital inputs	
Number of inputs: Terminal 0 = I0 Terminal 1 = I1 Terminal 2 = I2 Terminal 3 = I3	4 configurable as emergency stop or for general use configurable as limit switch LS1 or for general use configurable as reference switch or for general use configurable as limit switch LS2 or for general use
Nominal voltage:	24 VDC “low" range: -30…+5 V “high" range: +15…30 V for source operation, for safety reasons, normally-closed contacts (negative logic) should be used
Input current:	typically 6.5 mA
Input filer:	< 1ms
Circuit type:	electrically connected
Digital outputs	
Number: Terminal 4 O0: Terminal 5 O1: Terminal 6 O2: Terminal 7 O3:	4 Output “PUL” (pulses for motor) Output “DIR” (direction of motor rotation) programmable as required programmable as required
Switching capacity:	0.5 A each in the range 5…32 V, ripple max. 10 %
Short circuit protection:	no
Electrical isolation:	no
Voltage drop:	max. 0.3 V at 500 mA
Output delay:	< 1 µs, (longer for inductive load due to protective diode).

Power supply	
Internal current consumption: (from +5 V bus)	85 mA
Internal current consumption: (from V+ bus)	0 mA
External current consumption:	max. 2 A (all outputs), residual ripple max. 10%
Operational conditions	
Ambient temperature	Operation: 0…+55 °C without forced ventilation, Storage: -20…+85 °C
Noise immunity:	CE mark acc. to EN 61 000-6-3 and EN 61 000-6-2
Programming:	Based on PCD user program and pre-programmed function blocks (FB).
Terminals:	Pluggable 10-pole screw terminal block (4 405 4847 0), for wires up to 1.5 mm²

***)** For further information, please refer to manual 26/760, "PCD2.H210 - motion control modules for stepper motors".

LEDs and connection terminals

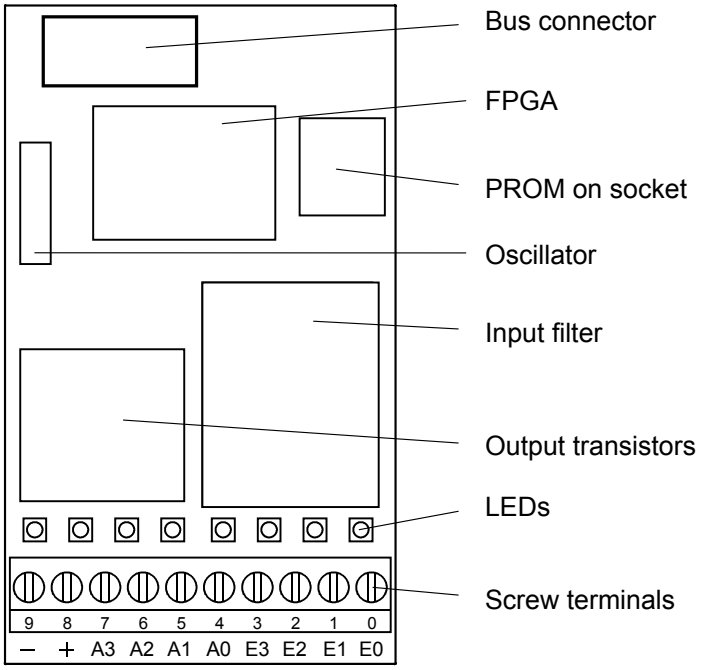

LED 0:	*) Voltage at input 0:	(Emergency stop)
LED 1:	*) Voltage at input 1:	(LS1)
LED 2:	*) Voltage at input 2:	(REF)
LED 3:	*) Voltage at input 3:	(LS2)
LED 4:	Voltage at output 0:	PUL
LED 5:	Voltage at output 1:	DIR
LED 6:	Voltage at output 2	
LED 7:	Voltage at output 3	

*) status inverted when used as a limit switch

Block diagram

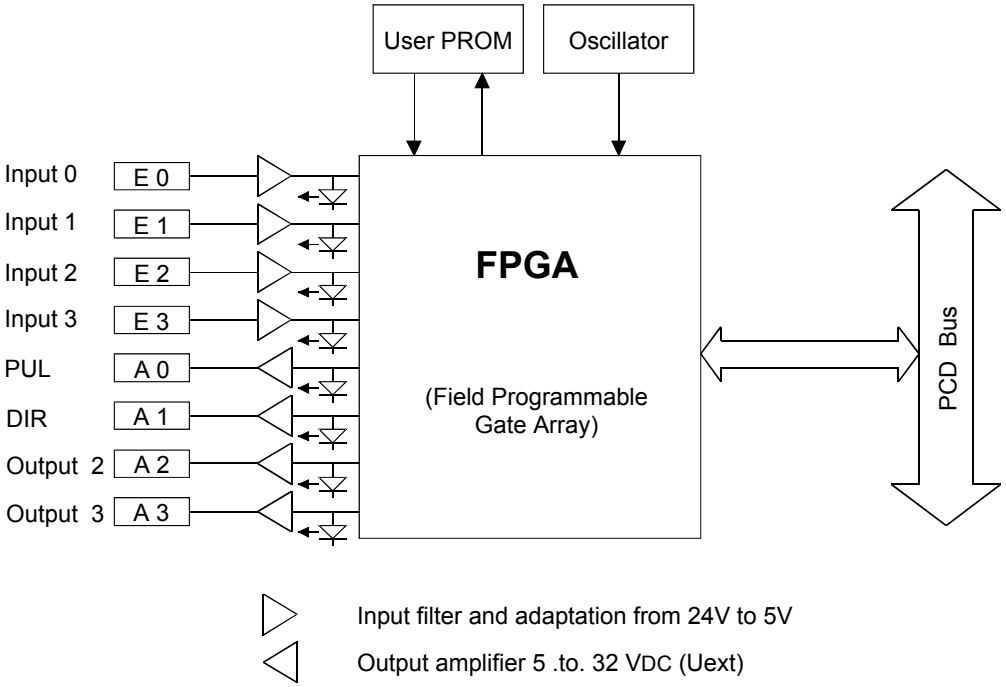

For further information, please refer to manual 26/760, "PCD2.H210 - motion control modules for stepper motors"

Watchdog: This module cannot be used on the base address 240, because it would interact with the watchdog, and would cause a malfunction.

For details, please refer to the "Watchdog" section, which describes the correct use of the watchdog in conjunction with PCD2 components.

6.18 Motion control modules for servo drives

PCD2.H310	**Motion control module for servo-motors, 1-axis encoder, 24 V**
PCD2.H311	**Motion control module for servo-motors, 1-axis encoder, 5 V**
PCD2.H320	**Motion control module for servo-drives, 2-axis with 24 V encoder**
PCD2.H322	**Motion control module for servo-drives, 1-axis with 24 V encoder (slave operation)**
PCD2.H325	**Motion control module for servo-drives, 2-axis with 5 V encoder and SSI absolute value encoder**
PCD2.H327	**Motion control module for servo-drives, 1-axis with 5 V encoder and SSI absolute value encoder (slave operation)**

I/O modules and I/O terminal blocks may only be plugged in and removed when the PCD and the external +24 V are disconnected from the power supply.

6.18.1 PCD2.H31x, motion control module for servo-motors, 1-axis encoder

Application

The PCD2.H31x motion control module is an intelligent I/O module. The module is used to position a single axis with variable speed control DC or AC servomotors. This requires the drive unit to have a power stage and incremental shaft encoder for capturing position or speed.

Each module contains a single-chip processor that independently controls every movement according to parameters supplied by the user program (velocity, acceleration and destination position). The axes are controlled independently of each other, which means that no interpolation is possible to trace curved paths. On the other hand, linking of multiple axes (point-point) in quasi-synchronous operation cane be programmed.

Technical data

Number of axes:	1
Motion parameters	
31-bit registers are used for destination position, velocity and acceleration, numerical range ± 2^{30}	
Position:	Resolution selectable (depending on mechanical factor)
Velocity:	Resolution selectable (depending on mechanical factor)
Acceleration:	Resolution selectable (depending on mechanical factor)
PID controller:	Sample time 341 µs, programmable proportional, integral and differential factors. Sample time for differential part can be programmed separately.
Analogue controller output:	Velocity set point ±10 V (resolution 12 bit)
Counting frequency:	max. 50 kHz
Digital inputs to PCD2.H310	
Number of inputs:	1 encoder A, B, IN, 1 reference input
Nominal voltage:	24 V typically “low” range: 0…+4 V “high" range: +15…30 V for source operation only
Input current:	typically 6 mA
Circuit type:	electrically connected
Reaction time:	30 µs
Encoder frequency:	max. 100 kHz
Digital inputs to PCD2.H311	
Number of inputs:	1 encoder A, /A, B, /B, IN, /IN, (no reference input)
Input voltage:	5 V typically
Signal level:	antivalent inputs according to RS422
Hysteresis:	max. 200 mV
Line termination resistance:	150 Ω
Encoder frequency:	max. 100 kHz
Analogue outputs for PCD2.H310/311	
Analogue controller output:	resolution 12 bit (with sign bit)
Short circuit protection:	yes
Electrical isolation:	no
Output voltage *):	±10 V, accuracy of adjustment ±5 mV
Circuit type:	positive switching
Minimum load impedance:	3 kΩ

*)	Balancing output voltage is carried out in the factory. The user is strongly advised not to adjust the tuning potentiometer.
5 V supply for 5 V encoder for PCD2.H311	
5 V output:	5 V supply of encoder
Short circuit protection:	yes
Electrical isolation:	no
Output voltage:	5 V
Max. load current:	300 mA
Short circuit current:	400 mA (this current also loads the +5 V Bus on the module)
Power supply	
Internal current consumption: (from +5 V bus)	max. 140 mA typically 125 mA
Internal current consumption: (from V+ bus)	0 mA
External current consumption:	max. 15 mA, typically 10 mA, residual ripple max. 10 %
Operational conditions	
Ambient temperature	Operation: 0…+55 °C without forced ventilation, Storage: -20…+85 °C
Noise immunity:	CE mark acc. to EN 61 000-6-3 and EN 61 000-6-2
Programming:	Based on PCD user program and pre-programmed function blocks (FB).
Terminals:	Pluggable 10-pole screw terminal block (4 405 4847 0), for wires up to 1.5 mm²

LEDs and connection terminals

PCD2.H310

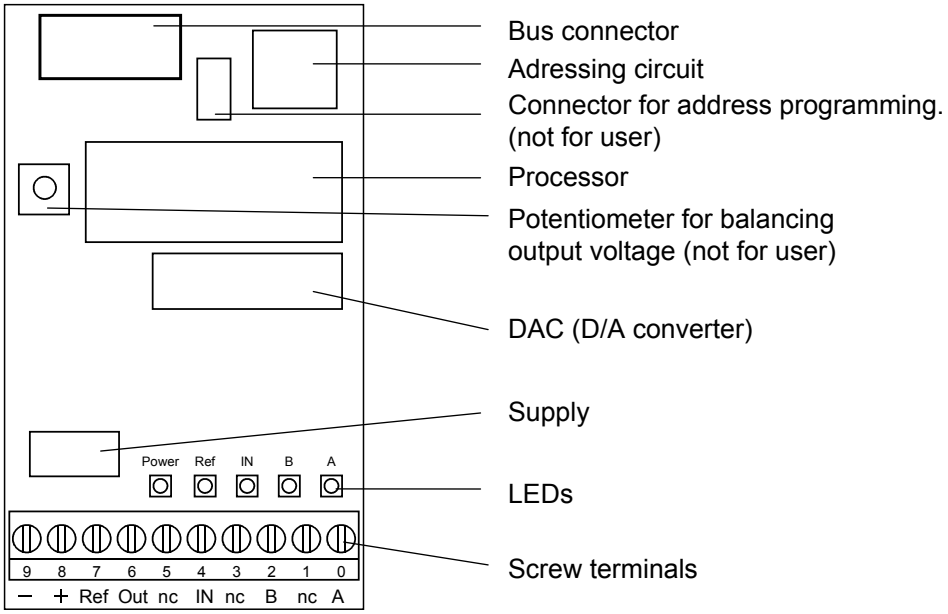

PCD2.H311

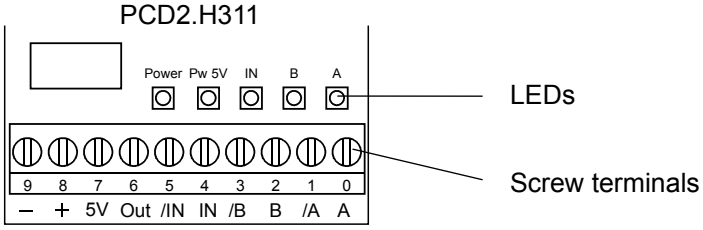

LED “A”	State of encoder input “A”
LED "B"	State of encoder input “B”
LED "IN"	State of index input
LED “Ref”	State of reference switch (H310)
LED “Pw 5 V”	Supply (5 V) to encoder (H311)
LED “Power”	Supply ± 15 V

Terminals - PCD2.H310

– and **+** = external supply terminals
Ref = digital input for the reference switch
Out = analogue controller output
A, B, IN = encoder signals
nc = terminals not used

Terminals - PCD2.H311

– and **+** = external supply terminals
5 V = output for 5 V supply to encoder (300 mA max.)
Out = analogue controller output
A, B, IN = non-inverted encoder signals
/A, /B, /IN = inverted encoder signals

Block diagram

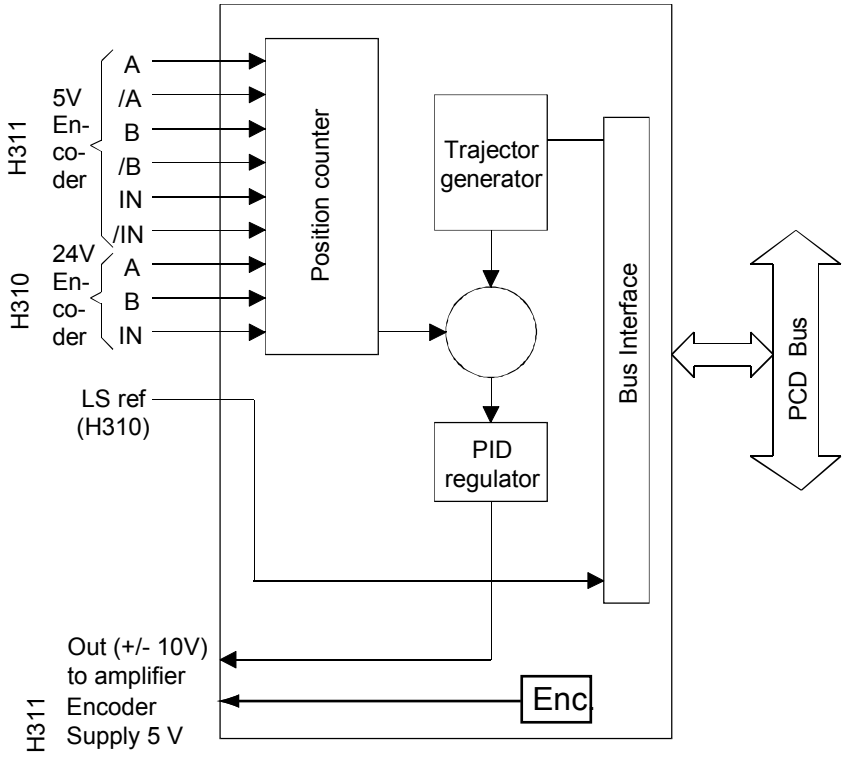

For further information, please refer to manual 26/762, "PCD2.H31x - motion control module for stepper motors"

Watchdog: This module cannot be used on the base address 240, because it would interact with the watchdog, and would cause a malfunction.

For details, please refer to the "Watchdog" section, which describes the correct use of the watchdog in conjunction with PCD2 components.

6.18.2 PCD2.H32x, motion control modules for servo-drives

There are four module types available:

PCD2.H320: 2 axes with 24 V encoder
PCD2.H325: 2 axes with 5 V and SSI absolute value encoder
PCD2.H322: 1 axis (slave operation) with 24 V encoder
PCD2.H327: 1 axis (slave operation) with 5 V and SSI absolute value encoder

The PCD2.H32x motion control modules are intelligent I/O modules in the PCD2 series. They are used to position two independent axes, with one variable speed AC or DC drive (servo-motor) each, or two axes as an electronic transmission.
This requires the drive unit to have a power stage and incremental shaft encoder for capturing position or speed. Displacement control may also be achieved with an SSI absolute value encoder.
Each module contains a DSP processor that independently controls every movement according to parameters supplied by the user program: velocity, acceleration and destination position ("PID control"). This enables each axis to execute independent movements, perform S-curve and trapezoidal motion profiles, change velocity and acceleration, perform interrupt functions and record the current axis position during motion.
In a PCD2 with expansion housing, up to 7 PCD2.H32x modules can be operated in parallel.

Technical data

Function-specific data		
Number of systems:	2	for H320/5
	1	for H322/7 + 1 H100 counter input 4 DI + 1 DO

Motion parameters	
31-bit registers are used for destination position, velocity and acceleration, numerical range $\pm 2^{30}$	
Position	Unit and resolution selectable (depending on mechanical factor)
Speed	Unit and resolution selectable (depending on mechanical factor)
Acceleration	Unit and resolution selectable (depending on mechanical factor)
PID controller	Sample time 100 µs, programmable proportional, integral and differential factors. Sample time for differential part can be programmed separately. Additional speed and acceleration feed-forward (all 16 bit values)
Analogue controller output	Velocity set point ±10 V (resolution 12 bit)
Counting frequency	max. 125 kHz for H320/5 max. 250 kHz for H322/7

Digital inputs for all PCD2.H32x modules per axis	
Number of inputs	1 reference input “REF” [1)] 2 limit switch inputs “LS1 / LS2” [1)] 1 synchronization input “SI” [2)]
Input voltage	24 VDC (6 to 32 VDC) smoothed, permitted ripple max. 10 %
"Low" range	-30…+5 V
"High" range	+15…+32 V
Input current at 24 VDC	7 mA (typically)
Switching type	electrically connected
Reaction time	300 µs

[1)] For safety reasons, normally-closed (NC) or PNP sensors should be used for the reference and limit switches. For this reason, these inputs work in sink mode (negative logic, i.e. LED = on when 0 V at input).
[2)] The synchronization input works in source mode (positive logic)

Digital outputs for all PCD2.H32x modules		
	Axis 1	**Axis 2**
Outputs	SO	SO
Supply	Uext	Uext
U_{ext} (typically 24 VDC)	6…32 VDC	6…32 VDC
I out	5…500 mA	5…500 mA
Voltage drop at 500 mA	< 0.3 V	< 0.3 V
Short circuit protection	Yes [1)]	Yes [1)]
Electrical isolation	No	No

[1)] The short circuit current is restricted to max. 1.6 A

Analogue outputs for modules PCD2.H320 and PCD2.H325		
	Axis 1	**Axis 2**
Outputs	OUT	OUT
Resolution (incl. sign bit)	12 bit	12 bit
Short circuit protection	yes	yes
Electrical isolation	No	No
Output voltage fluctuation [1)]	+/- 10 V	+/- 10 V
Minimum load impedance	3 kΩ	3 kΩ

[1)] Setting accuracy ± 5 mV. Balancing output voltage is carried out in the factory, and the value is stored in a digitally programmable potentiometer

Analogue outputs for modules PCD2.H322 and PCD2.H327		
	Axis 1	**Axis 2**
Outputs	OUT	NC
Resolution (incl. sign bit)	12 bit	-
Short circuit protection	yes	-
Electrical isolation	No	-
Output voltage fluctuation [1)]	+/- 10 V	-
Minimum load impedance	3 kΩ	-

[1)] Setting accuracy ± 5 mV. Balancing output voltage is carried out in the factory, and the value is stored in a digitally programmable potentiometer.

Encoder inputs for modules PCD2.H320 and PCD2.H322		
	Axis 1	**Axis 2**
Inputs	A B IN	A B IN
Number of inputs	3	3
Input voltage (typical)	24 V	24 V
Signal state L (Low)	-30…+5 V	-30…+5 V
Signal state H (High)	+15…+32 V	+15…+32 V
Input current (typical) H320 H322	7 mA 7 mA	7mA 2mA
Source operation (positive logic)	x	x
F_{max}	125 kHz [1)]	125 kHz [1)]
[1)] Internal counting frequency 500 kHz		

Encoder inputs for modules PCD2.H325 and PCD2.H327		
	Axis 1	**Axis 2**
Inputs	A,/A B,/B IN,/IN	A,/A B,/B IN,/IN
Number of inputs	6	6
Input voltage (typical)	RS422	RS422
Input impedance (typical) H325 H327	150 Ω 150 Ω	150 Ω 1500 Ω
F_{max}	250 kHz [1)]	250 kHz [1)]
[1)] Internal counting frequency 1 MHz		

5 V supply for 5 V encoder modules PCD2.H325 and PCD2.H327	
Short circuit protection	yes
Electrical isolation	No
Output voltage	5 V
Max. load current	300 mA
Short circuit current	400 mA
Overvoltage protection	TVS diode 39 V +/- 10%
Reverse voltage protection	No

Power supply to all modules	
Internal current consumption: from +5 V bus (without encoder)	typically 210 mA, max. 230 mA (250 mA in SSI operation)
Internal current consumption: from +5 V bus (without encoder)	15…20 mA
External current consumption:	0...2 mA (without load current) 1 A for outputs
The total current consumption for all I/O modules including encoders must not exceed 1.6 A. PCD2.H32x modules should be plugged onto the base unit wherever possible (not the expansion housing).	
Operational conditions	
Ambient temperature	Operation: 0…+55 °C without forced ventilation, Storage: -20…+85 °C
Noise immunity:	CE mark acc. to EN 61000-6-3 and EN 61000-6-2
Programming:	Based on PCD user program and pre-programmed function blocks (FB).
Terminals:	Pluggable 10-pole screw terminal block (4 405 4847 0), for wires up to 1.5 mm²

LEDs and connection terminals

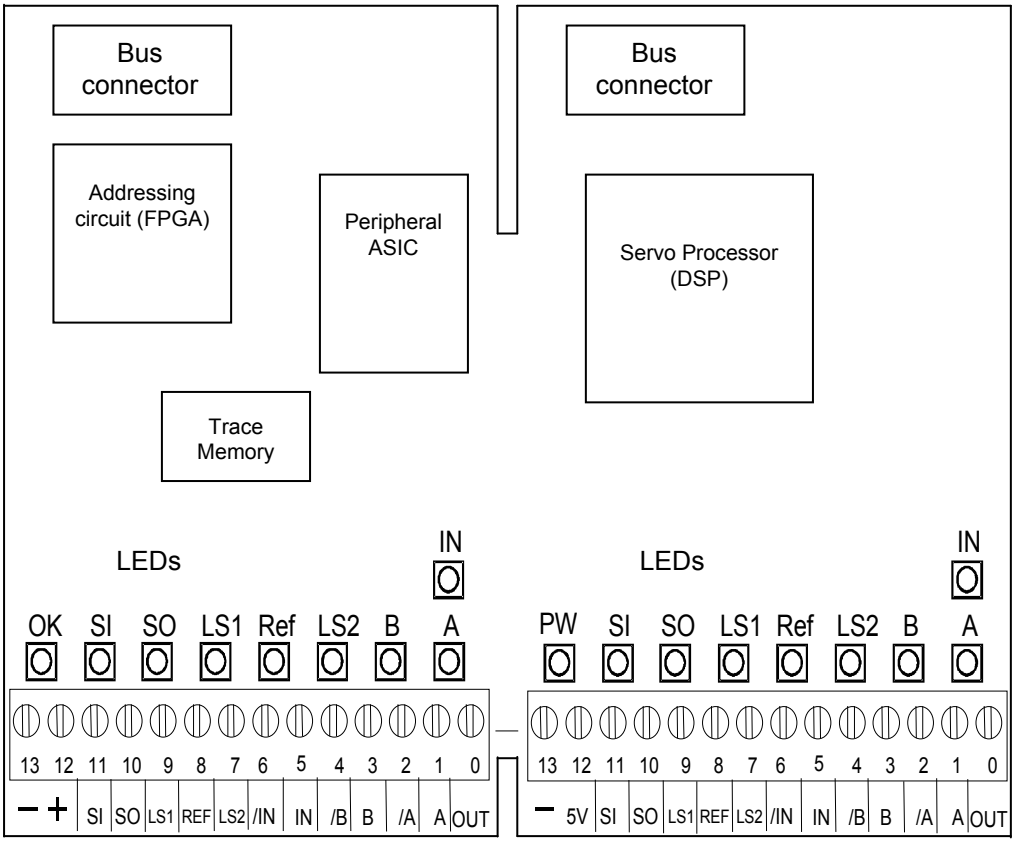

2xLED “IN”	State of index input
2x LED “A”	State of encoder input “A”
2xLED "B"	State of encoder input “B”
2x LED "LS2"	State of limit switch 2
2x LED “Ref”	State of reference switch
2x LED “LS1”	State of limit switch 1
2x LED “SO”	State of synchronization output
2x LED “SI”	State of synchronization input
1x LED “PWR”	State of internal voltage (+/- 15 V)
1x LED “OK”	State of controller

On this circuit board there are components that are sensitive to electrostatic discharges. For further information, refer to Appendix B, "Icons"

Inputs per axis				
Module type	**PCD2.H320**	**PCD2.H322**	**PCD2.H325**	**PCD2.H327**
Terminal 1 = “A”	Encoder signal “A”			
Terminal 2 = “/A”	[Not used]		Encoder signal “/A”	
Terminal 3 = “B”	Encoder signal “B"			
Terminal 4 = “/B”	[Not used]		Encoder signal “/B"	
Terminal 5 = IN”	Encoder signal “IN"			
Terminal 6 = /IN”	[Not used]		Encoder signal “/IN"	
Terminal 7 = “LS2”	Limit switch 2			
Terminal 8 = REF”	Reference switch			
Terminal 9 = “LS1”	Limit switch 1			
Terminal 11 = SI”	Synchronization input			
Screw terminal block J5, axis 1				
Terminal 12 = “5 V”	[Not used]		Supply output +5 VDC for encoder	
Terminal 13 = “-”	Ground (PGND)			
Screw terminal block J4, axis 2				
Terminal 12 = "+"	External supply + 24 VDC smoothed, for SO			
Terminal 13 = “-”	Ground (PGND)			
Outputs per axis				
Module type	**PCD2.H320**	**PCD2.H322**	**PCD2.H325**	**PCD2.H327**
Terminal 0 = "OUT”	Analogue control output. (Slave) axis 1 only			
Terminal 10 = “SO”	Synchronization output			

Software queries

The elements listed in the table below can be queried by the user (examples for module 1). The module type and the FPGA version can be obtained with the ‘FB Exec’ function and the ‘RdIdent’ instruction.

Inputs	**Description**
REF_1s2	REFerence switch
LS1_1s2	Limit switch 1
LS2_1s2	Limit switch 2
AxisSelect_1_2 (output)	RES = axis 1, SET = axis 2
AxisIn_1s2	State of axis synchronization input
AxisOut_1s2	State of axis synchronization output
AxisEvent_1_2	Axis event interrupt
PowerError_1_2	Internal supply error
PowerEncError_1_2	Encoder supply error
CableBreak_1s2	Cable break
SSI_timeout_1s2	SSI timeout
OK_LED_1_2	State of controller (OK LED)
HostIOError_1_2	Host I/O error

(_1s2 selection of axis via “Axis Select” output)
(_1_2 affects whole module)

Block diagram

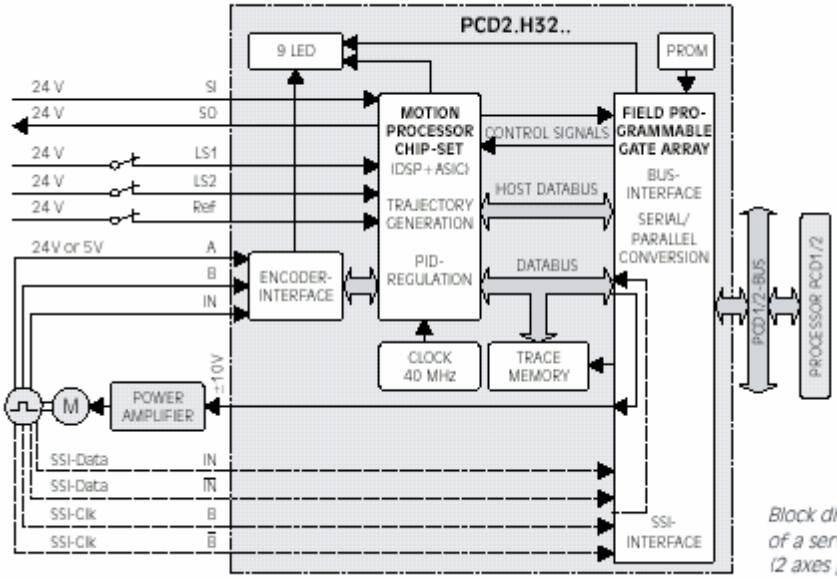

Block diagram of a servodrive for 1 axis (2 axes per module)

For further information, please refer to manual 26/772, "PCD2.H32x - motion control modules for servo-drives"

Watchdog: This module cannot be used on the base address 240, because it would interact with the watchdog, and would cause a malfunction.

For details, please refer to the "Watchdog" section, which describes the correct use of the watchdog in conjunction with PCD2 components.

7 System cables and adapters

7.1 System cables with I/O module connections to the PCD

The route to easy, fast connection is via these preconfigured cables. The connector is ready mounted at the PCD end of the cable, so it just has to be plugged in to connect. At the process end there are ribbon connectors to the terminal adapters or the relay interface, or 0.5 mm² or 0.25 mm² strands, numbered and colour-coded.

All cables are described in Manual 26-792 'System cables and adapters'.

8 Configuration and programming

8.1 CPUs

This section assumes that the user is familiar with the PG5 software. If not, please refer to Manual 26/733 “PG5”.

8.1.1 Configuring the PCD with PG5

Connecting the PCD to the configuration with PG5:

❶ Start up PG5

❷ Create new project:

- Click on “New…”

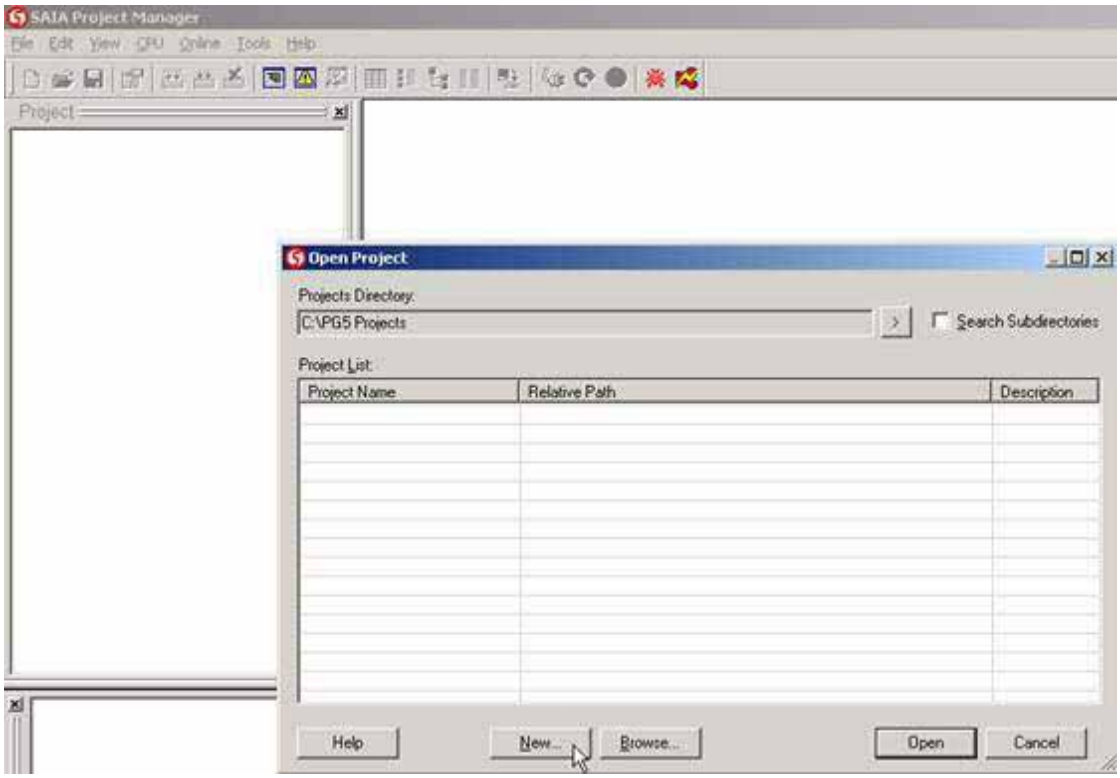

- The “New Project” dialogue is displayed

Creating and opening a new project. The dialogue box is brought up via “File/New Project”. The size of the dialogue box can be changed by dragging the bottom right corner or by dragging the frame.	
Project Name Name of the project to be created. This is used as the directory name for the project. It must not include any path or file extension.	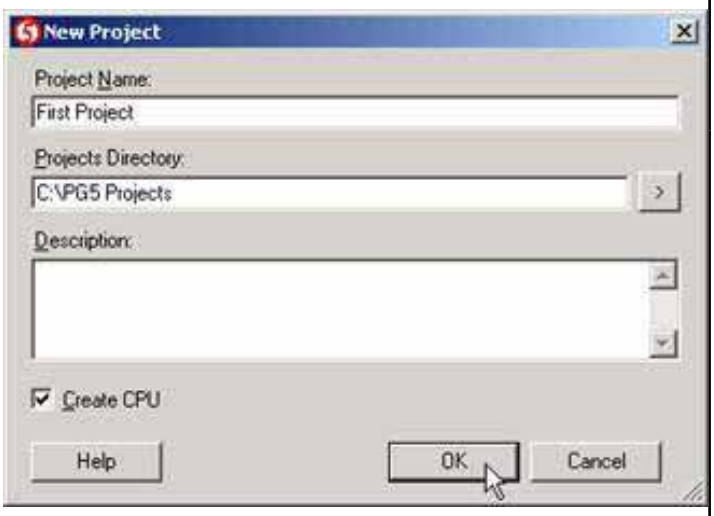
Project Directory Directory containing the new project. The specified project directory is set up via “Options”, “Directories page”. The ‘>‘ button can be used to browse for a directory.	
Description May contain up to 2000 characters of free text. The first line of text is displayed in the "Description" window in the "Open Project" dialogue box.	
“Create CPU” box If this box is ticked, a CPU with the same name is created automatically (the name can be changed later in CPU properties). This is useful for single CPU projects. If it is not ticked, a project will be created without any CPU. The “New CPU” command can be used to add a CPU.	

- Enter project name, e.g. “First Project”
- Check “Create CPU” option
- Click “OK”

8

❸ Go to "Online Settings" and select the following options:
- Channel name: S-Bus USB
- Tick PGU option
- Click “OK”

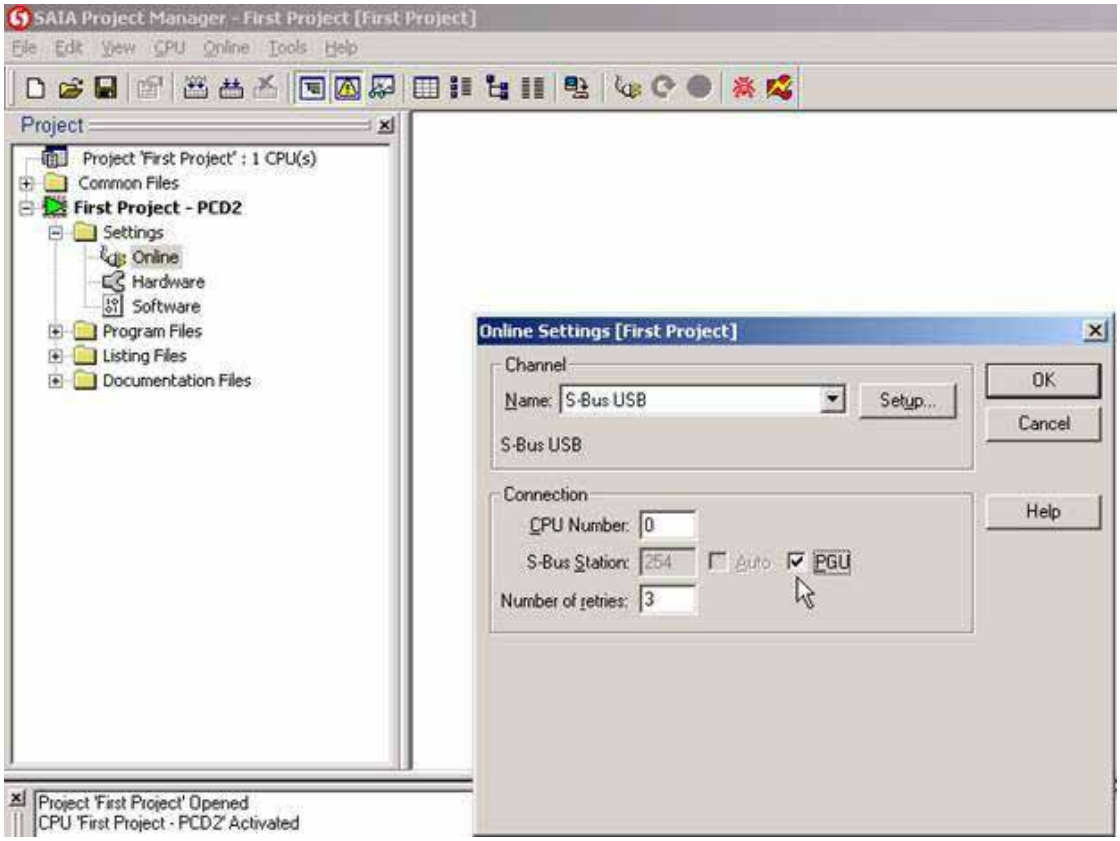

❹ Now connect the PCD to the PC via the USB cable. Ensure that the PCD is connected to the 24 VDC supply.

❺ Go to “Hardware Settings”:

- Click on “Upload…”, to copy the settings from the CPU.

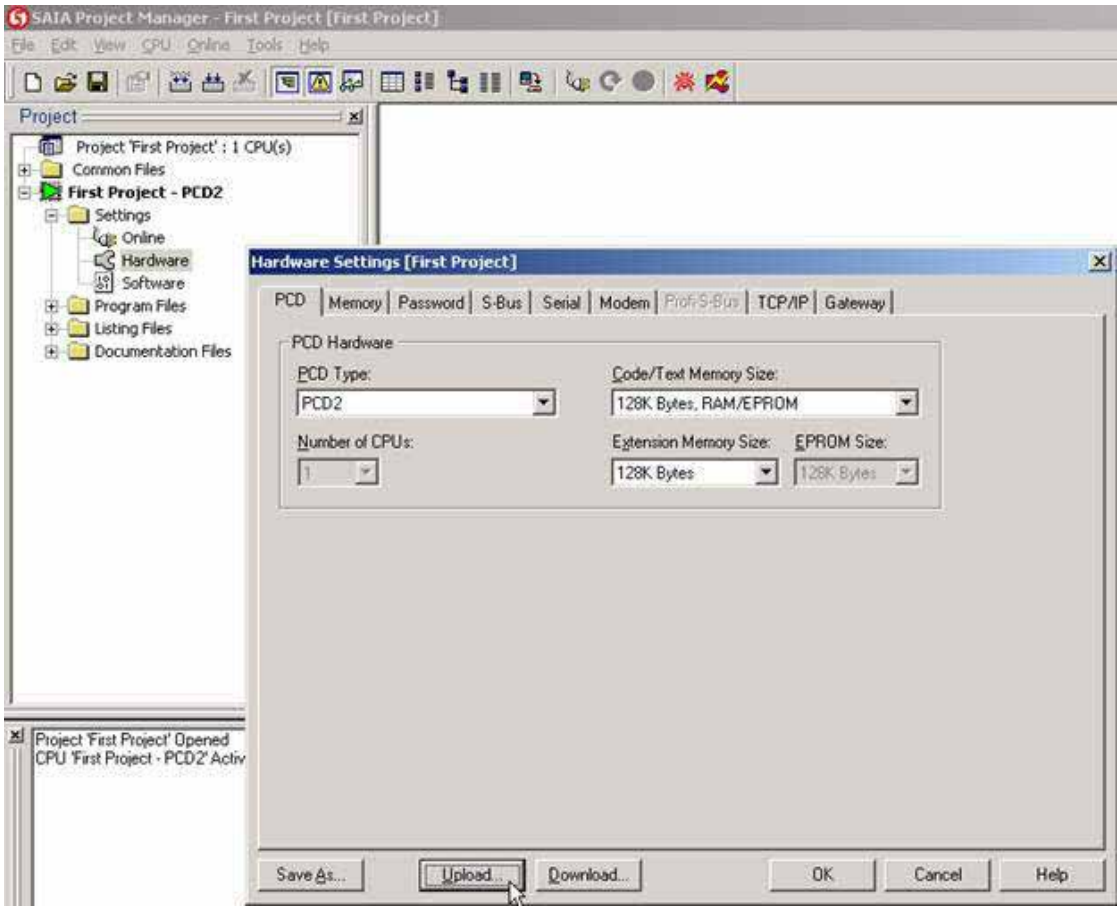

- Click on “Upload…”

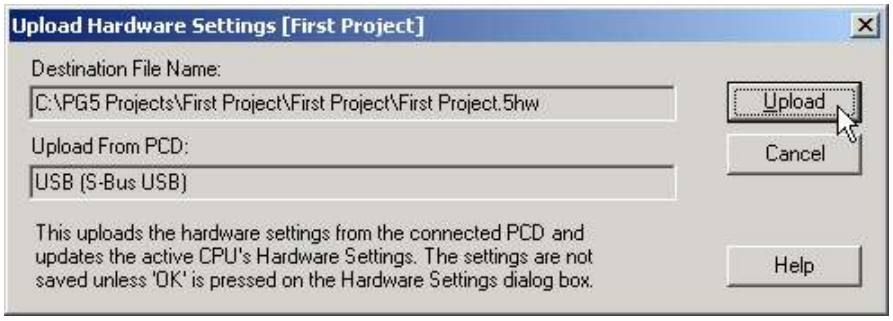

- Click “OK”

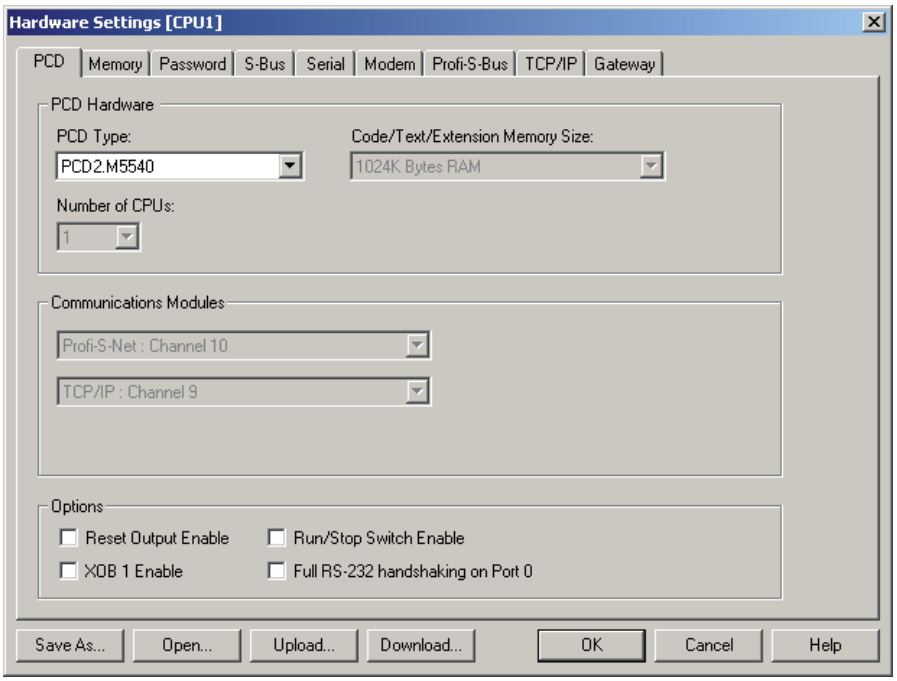

The connection of the PCD to the configuration with PG5 via the PC is complete. The hardware settings can now be changed and programming the application can begin.

8.1.2 "Hardware settings" option

The PCD2.M5_ CPUs do not have any "jumpers" to be set. As with earlier Saia® PCD systems, the settings are entered in PG5 on the “Hardware Settings” screen. After you have selected the desired settings, they will be loaded into the PCD2.M5_ when you click “Download...”.

If "Upload..." is pressed, the current sttings for the CPU will be displayed.

Example: PCD2.M5540 settings

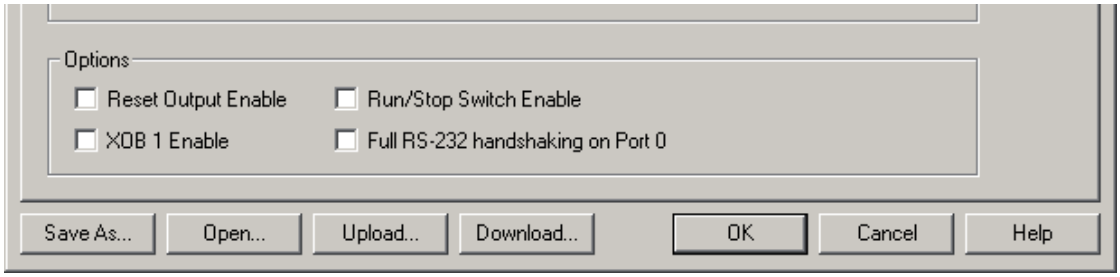

Reset Output Enable

If the CPU goes into Halt mode, all outputs are set to 0.

XOB 1 Enable

Where PCD2/3.Cxxxx module holders are used, a cable break or power outage is displayed by calling XOB 1.

Run/Halt Switch Enable

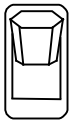

The Run/Halt switch is activated. On the PCD2.M5_, it is thus possible to manipulate the operating mode with the switch that is accessible on the top of the CPU

Full RS-232 handshaking on Port 0

This allows Port 0 to be used as a normal serial port or as a modem interface.

If this option is enabled, it will no longer be possible to communicate with the CPU via the PGU port. This seting should only be used when the USB port or the Ethernet connection are being used for programming.

All these options are written to the “flash card” when the settings are backed up.

9 Maintenance

PCD2 components are maintenance-free, apart from the CPUs, where the battery needs to be changed occasionally.

PCD2 components do not contain any parts that can be swapped out by the user. If hardware problems arise, the components should be returned to Saia-Burgess.

9.1 Changing the battery on the PCD2.M5xx0

The resources (registers, flags, timers, counters etc), and possibly the user program and the text strings/DBs, are stored in RAM. To ensure that they are not lost and that the hardware clock (where present) continues to run when there is a power failure, the PCD2s are equipped with a buffer capacitor (SuperCap) or a buffer battery:

CPU type	Buffer	Buffer time
PCD2.M5xx0	Renata CR 2032 lithium battery	1-3 years[1)]

1) Depending on the ambient temperature; the higher the temperature, the shorter the buffer time

With new controllers, the batteries are packaged with the units, and have to be inserted on commissioning. Observe the polarity of the batteries:

- Insert CR 2032 coin cells in such a way that the Plus pole is visible

CPUs with lithium batteries are not maintenance-free. The battery voltage is monitored by the CPU. The BATT LED lights up and XOB 2 is called if

- the battery voltage is less than 2.4 V
- the battery is missing

We recommend changing the batteries with the PCD attached to the power supply, to avoid any loss of data.

A Annex

A.1 Icons

	In manuals, this symbol refers the reader to further information in this manual or other manuals or technical information documents. As a rule there is no direct link to such documents.
	This symbol warns the reader of the risk to components from electrostatic discharges caused by touch. **Recommendation:** Before coming into contact with electrical components, you should at least touch the Minus of the system (cabinet of PGU connector). It is better to use a grounding wrist strap with its cable permanently attached to the Minus of the system.
	This sign accompanies instructions that must always be followed.
Classi	Explanations beside this sign are valid only for the Saia-Burgess PCD Classic series.
xx7	Explanations beside this sign are valid only for the Saia-Burgess PCD xx7 series.

A

A.2 Definitions of serial interfaces

A.2.1 RS232

Designation of signal lines:

Data lines	TXD	Transmit data
	RXD	Receive data
Signal and response circuits	RTS	Request to send
	CTS	Clear to send
	DTR	Data terminal ready
	DSR	Data set ready
	RI	Ring indicator
	DCD	Data carrier detect

Signals to RS232

Signal type	Logical state	Set-point	Nominal value
Data signal	0 (space) 1(mark)	+3 V to +15 V -15 V to -3 V	+7 V -7 V
Control/message signal	0 (off) 1 (on)	-15 V to -3 V +3 V to +15 V	-7 V +7 V

The idle state of the data signals = "mark"
of the control and message signals = “off”

A

A.2.2 RS485/422

Signals to RS485 (RS422)

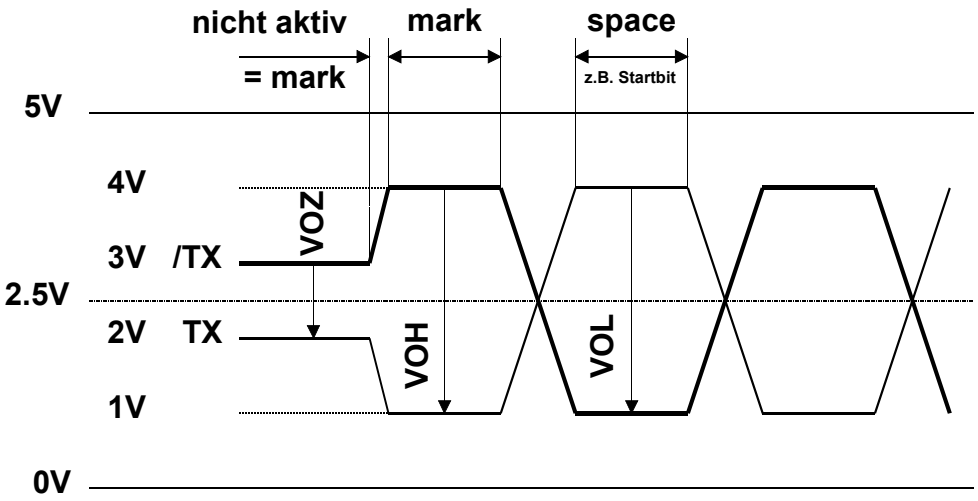

VOZ = 0.9 V min ... 1.7 V
VOH = 2 V min (with load) ... 5 V max (without load)
VOL = -2 V ... -5 V

In the idle state, RS422 is in the “mark” position

RS422:

Signal type	Logical state	Polarity
Data signal	0 (space) 1(mark)	TX positive to /TX /TX positive to TX
Control/message signal	0 (off) 1 (on)	/RTS positive to RTS RTS positive to /RTS

RS485:

Signal type	Logical state	Polarity
Data signal	0 (space) 1(mark)	RX-TX positive to /RX-/TX /RX-/TX positive to RX-TX

Not all manufacturers use the same connection configuration, so the data lines may need to be crossed

To guarantee error-free operation of an RS485 network, the network should be terminated at both ends. Cable and line termination resistors should be selected in accordance with manual 26/740 "Installation components for RS485 networks".

A

A.2.3 TTY/current loop

Signals to TTY/current loop

Terminal 1	TS	Transmitter Source	Sender
Terminal 3	TA	Transmitter Anode	
Terminal 6	TC	Transmitter Cathode	
Terminal 8	TG	Transmitter Ground	
Terminal 2	RS	Receiver Source	Recipient
Terminal 4	RA	Receiver Anode	
Terminal 7	RC	Receiver Cathode	
Terminal 9	RG	Receiver Ground	

Signal type	Set-point	Nominal value
Power for logic L (space)	-20 mA to + 2 mA	0 mA
Power for logic H (mark)	+12 mA to +24 mA	+20 mA
Neutral voltage to TS, RS	+16 V to +24 V	+24 V
Short circuit power on TS, RS	+18 mA to +29.6 mA	+23.2 mA

The idle state of the data signals = "mark"
By wiring to the cable connector, the user selects either an "active" or "passive" circuit.

The max. transmission rate for TTY/current loops at 20 mA is 9600 bps.

A

A.3 Installation instructions and relay contacts

A.3.1 Installation instructions for carrying extra-low voltage

On modules designed for low voltage (e.g. PCD3.A251), only voltages up to max. 50 V may be connected for safety reasons.

The safety standard covering the air and leakage current distances between neighbouring channels is not satisfied by this module for higher voltages (50…250 V).

Note that all connections to the relay contacts on a module must be connected to the same circuit, i.e. only one phase per module is permitted. Each load circuit may however be fused individually.

A.3.2 Installation instructions for carrying low voltage

For reasons of safety it is not permissible to connect extra-low voltages (up to 50V) and low voltages (50…250 V) to the same module.

If a PCD module is connected to a higher voltage (50…250 V), approved components for this voltage must be used for all elements that are electrically connected to the system.

Using higher voltage (50...250V), all connections to the relay contacts must be connected on the same circuit, i.e. in such a way that they are all protected against one AC phase by one common fuse. Each load circuit may however be fused individually.

Examples:

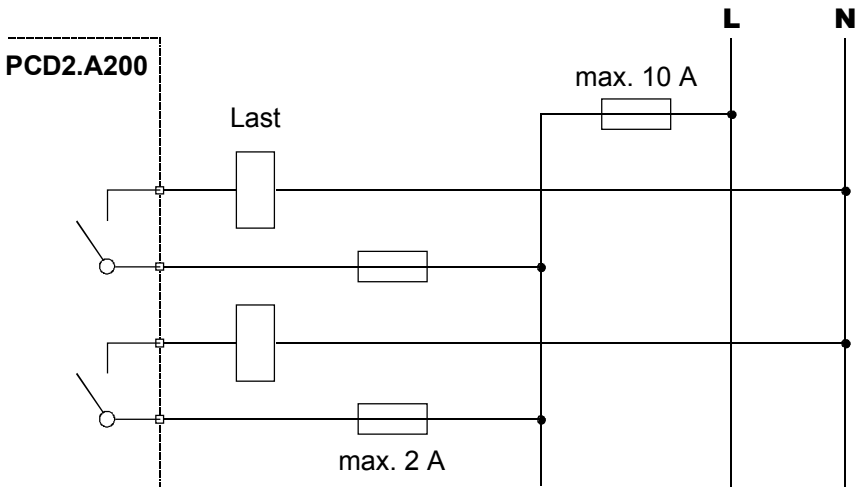

A

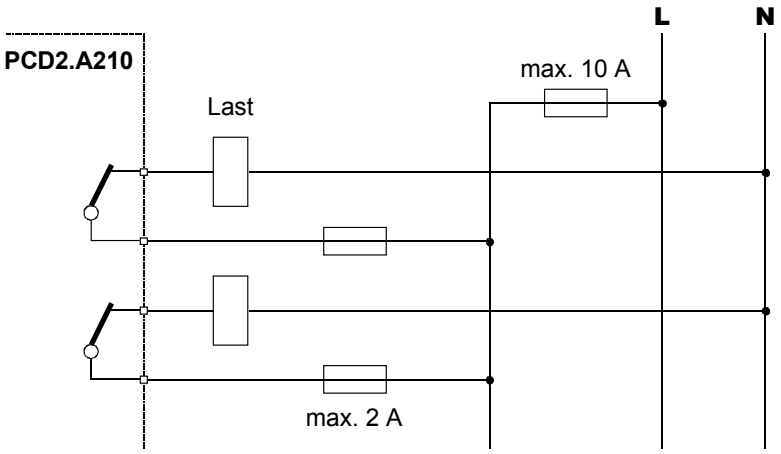
PCD2.A210
L
N
max. 10 A
Last
max. 2 A

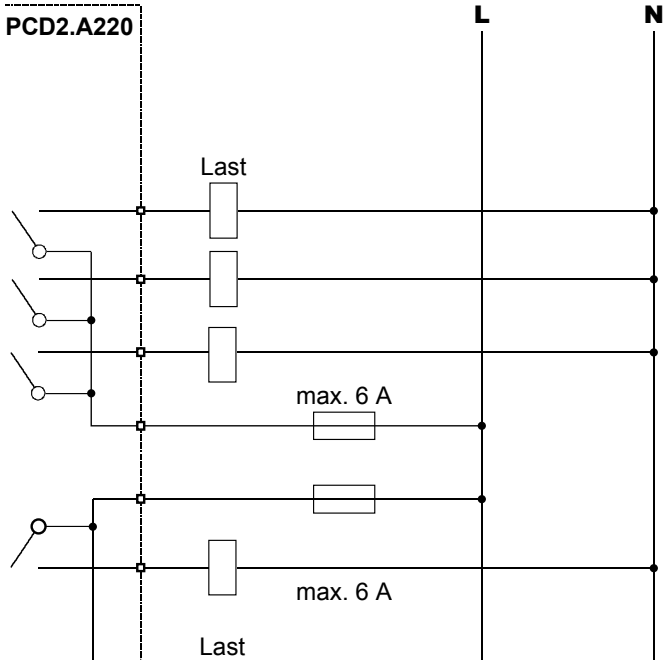
PCD2.A220
L
N
Last
max. 6 A
max. 6 A
Last

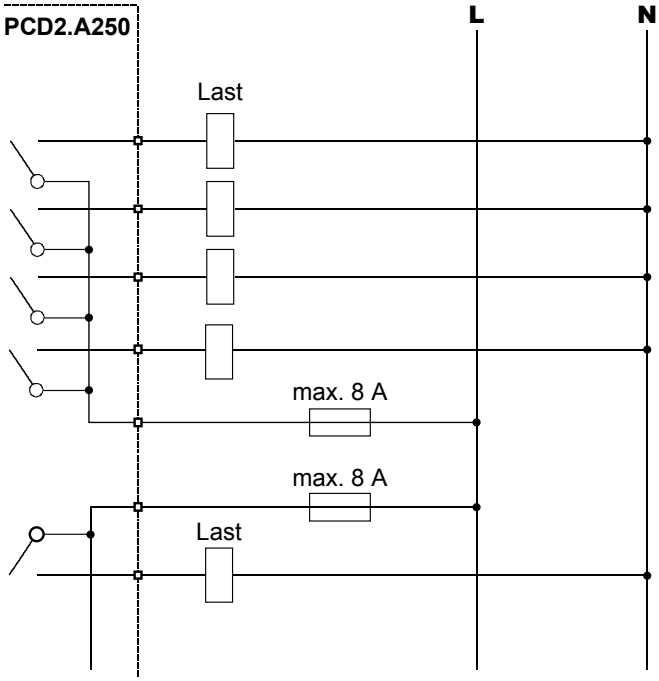
PCD2.A250
L
N
Last
max. 8 A
max. 8 A
Last

A

A.3.3 Carrying inductive loads

Because of the physical properties of inductance, it cannot be cut off without interference. This interference must be minimised as far as possible. Although the PCD is immune to this interference, there are other devices that could be affected.

Please note that, as a result of harmonisation of norms within the EU, the EMC standards have been in effect since 1996 (EMC Directive 89/336/EC). Two principles can therefore be set out:

- INTERFERENCE SUPPRESSION IS ESSENTIAL FOR INDUCTIVE LOADS
- INTERFERENCE SHOULD BE ELIMINATED AT SOURCE WHERE POSSIBLE

The relay contacts on this module are switched. However, it is still recommended to connect a suppressor element to the load.

(Often obtainable as a standard component of certified gates and valves).

When carrying direct current, it is recommended to install a protective diode across the load, even where an ohmic load is theoretically present. In practice, there will always be an inductive portion (connecting cable, resistor winding etc.). Note that the switch-off time will be extended.

(Tau approx. L/RL * √ (RL * IL/0.7).

For direct current, the transistor output modules are recommended.

A.3.4 Details of relay manufacturers for sizing of RC elements

Contact protection circuits:

The purpose of contact protection circuits is to suppress arcing and hence to increase the service life of the contact elements. Any protective circuit may have disadvantages as well as advantages. For how to suppress arcing with an RC element, see figure opposite.

When switching off load circuits with inductive components (e.g. relay coils and magnet windings), the break in current to the contacts causes an overvoltage (self-inductance voltage), which may be many times the operating voltage and compromise the isolation of the load circuit. The resulting sparks will cause the relay contacts to wear out quickly. For this reason, the contact protection circuit is particularly important with inductive load circuits. The values for the RC combination can also be determined from the diagram, but for voltage U the overvoltage arising when the current is interrupted (measured e.g. with an oscillograph) should be used. The current can be calculated from this voltage and the known resistance against which it was measured.

In suppression elements, suppression condensers conforming to VDE 0565 T1 Class X2 must be used. These condensers are switch-tolerant and designed for particularly high overvoltages. Direct operation at mains voltage is still possible.

The resistors used must be able to withstand high voltages (impulse resistance). Particularly at low resistances, there may be flashovers in the coil caused by the production process. This is why fixed carbon resistors are most often used for suppression elements. However, vitreous enamelled wire-wound resistors and cement resistors with large pitch windings are also suitable.

Sizing aid:

The value C is derived directly from the current to be carried. The value of resistance R is found by drawing a straight line between the relevant points on the I and R curves and reading the resistance at the intersection with the R curve.

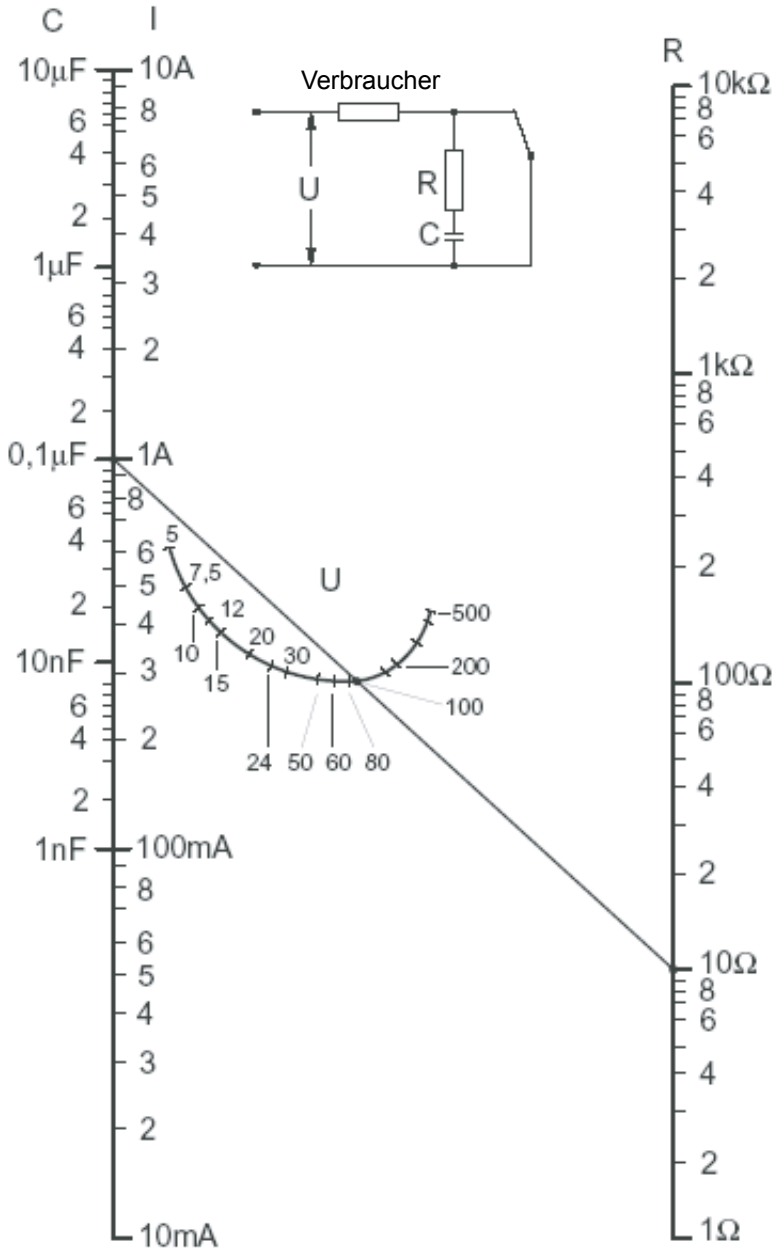

Example:

U = 100 V I = 1 A

C is calculated directly as 0.1 µF

R = 10 Ω (intersection with R scale)

A

A.4 Order details

Type	Description	Weight
PCD2.M5440	CPU with 1 MByte user program memory, with Run/Halt switch, Backup option with PCD7.R5xx additional memory, USB port for PG5, max. 1023 digital I/Os, 4 user inputs, 2 user outputs, Web server, RS232, RS485 for Profi-S-Net and RS485 for S-Bus, Data backup 1...3 years with lithium battery	950 g
PCD2.M5540	same as PCD2.M5440, with 2 Ethernet TCP/IP sockets	950 g
	Expansion housings	
PCD2.C2000	for 8 additional I/O modules, 24 VDC supply integrated	1040 g
PCD2.C1000	for 4 additional I/O modules, 24 VDC supply integrated	500 g
	Connecting cable/connector to expansion housing	
PCD2.K010	Connector (PCD2.C2000....PCD2.C2000)	40 g
PCD2.K106	Connecting cable 0.7 m (PCD2.M5...PCD3.C)	68 g
PCD3.K106	Connecting cable 0.7 m (PCD2.C2000/.PCD3.C....PCD2.C2000/.PCD3.C)	68 g
PCD3.K116	Connecting cable 1.2 m (PCD2.C2000/.PCD3.C....PCD2.C2000/.PCD3.C)	40 g
PCD2.K100	Connecting cable 2 m (PCD2.M5...PCD2.C1x0)	200 g
PCD2.K110	Connecting cable 2 m (PCD2.M5...PCD2.C1x0)	200 g
PCD2.K120	Connecting cable 2 m (PCD2.M5...PCD2.C1x0)	200 g
	Additional memory	
PCD7.R500	Flash module, 1 MByte program backup for PCD2.Mxxx0, Slot M1,	
PCD7.R550M04	Flash module, 4 MByte with file system for PCD2.Mxxx0, Slot M1 or M2	
PCD7.R551M04	Flash module, 1 MByte program backup + 3 MByte file system for PCD2.Mxxx0, Slot M1/M2	
	Communication modules for Slot A1 and/or A2	
PCD7.F110	with RS422/RS485 interface (electrically connected)	8 g
PCD7.F121	with RS232 interface (suitable for modem)	8 g
PCD7.F130	with interface for 20 mA current loop	8 g
PCD7.F150	with RS485 interface (electrically isolated)	8 g
PCD7.F180	Belimo MP-Bus (based on RS232)	8 g
	Communication modules for Slots 0...3	
PCD2.F2100	RS422/RS485 & optional PCD7.F1xx	10 g
PCD2.F2210	RS232 & optional PCD7.F1xx	10 g
PCD2.F2810	Belimo MP-Bus & optional PCD7.F1xx	10 g
	Field bus connections for Slot C (in preparation)	
PCD7.F7400	CAN interface	
PCD7.F7500	Profibus DP connection (Master)	45 g
	Modem module for I/O module slot	
PCD2.T814	33.6 kbps analogue modem (RS232 and TTL interface)	50 g
PCD2.T851	ISDN-TA digital modem (RS232 and TTL interface)	50 g
	Accessories	
4 507 4817 0	Renata CR 2032 lithium battery (coin cell), PCD2.M5xx0	10 g
	Plug-in terminal blocks	
4 405 4847 0	with 10 terminals (standard)	17 g
4 405 4869 0	with 14 terminals (for ...A250)	9 g

A

Type	Description	Weight
	Digital input modules	
PCD2.E110	24 VDC, input delay typically 8 ms (pulsed voltage possible)	35 g
PCD2.E111	24 VDC, input delay typically 0.2 ms (smoothed voltage required)	35 g
PCD2.E112	12 VDC, input delay typically 9 ms (pulsed voltage possible)	35 g
PCD2.E116	5 VDC, input delay typically 0.2 ms (smoothed voltage required)	35 g
PCD2.E160	24 VDC, input delay typically 8 ms (pulsed voltage possible, connection via 34-pole system cable)	25 g
PCD2.E161	24 VDC, input delay typically 0.2 ms (smoothed voltage required, connection via 34-pole system cable)	25 g
PCD2.E165	24 VDC, input delay typically 8 ms (pulsed voltage possible, connection via 20-pole cage clamp terminal block)	30 g
PCD2.E166	24 VDC, input delay typically 0.2 ms (smoothed voltage required, connection via 20-pole cage clamp terminal block)	30 g
	Digital input modules, electrically isolated	
PCD2.E500	110…240 VAC, input delay typically 10 ms (electrically isolated)	55 g
PCD2.E610	24 VDC, input delay typically 10 ms (pulsed voltage possible)	40 g
PCD2.E611	24 VDC, input delay typically 1 ms (smoothed voltage required)	40 g
PCD2.E613	48 VDC, input delay typically 10 ms (pulsed voltage possible)	40 g
PCD2.E616	5 VDC, input delay typically 1 ms (smoothed voltage required)	40 g
	Digital output modules	
PCD2.A300	with 6 outputs, 24 VDC/2 A	45 g
PCD2.A400	with 8 outputs, 24 VDC/0.5 A	40 g
PCD2.A460	connection via 34-pole system cable	30 g
PCD2.A465	connection via 24-pole spring terminal block	35 g
	Digital output modules, electrically isolated	
PCD2.A200	with 4 make contacts 2 A/250 VAC or 2 A/50 VDC	60 g
PCD2.A210	with 4 break contacts 2 A/250 VAC or 2 A/50 VDC	60 g
PCD2.A220	with 6 make contacts 2 A/250 VAC or 2 A/50 VDC	65 g
PCD2.A250	with 8 make contacts 2 A/48 VAC or 2 A/50 VDC	65 g
PCD2.A410	with 8 outputs, 24 VDC/0.5 A, electrically isolated	40 g
	Combined digital input and output modules	
PCD2.B100	with 2 inputs and 2 transistor outputs, plus 4 selectable as inputs or outputs	45 g
	Multi-functional input/output modules	
PCD2.G400	10 digital inputs, 2 analogue inputs 10 Bit, 6 analogue inputs 10 Bit Pt/Ni 1000, 8 digital outputs, 6 analogue outputs 8 Bit	79 g
PCD2.G410	16 digital inputs, 4 analogue inputs 10 Bit, 4 relay outputs, 4 analogue outputs 8 Bit	79 g

A

Type	Description	Weight
	Analogue input modules	
PCD2.W200	Resolution 12 Bit, 8 input channels 0…10 V	35 g
PCD2.W210	Resolution 12 Bit, 8 input channels 0…20 mA	35 g
PCD2.W220	Resolution 12 Bit, 8 input channels Pt/Ni 1000 (2-wire) for resistance thermometer, –50…+400 °C or +200 °C	40 g
PCD2.W220Z02	Analogue input module, 8 inputs, 10 bits, NTC10 temperature sensors	40 g
PCD2.W220Z12	Analogue input module, 10 bits, 4 inputs 0…10 V and 4 inputs Pt/Ni 1000	40 g
PCD2.W300	Resolution 12 Bit, 8 input channels 0…10 V	40 g
PCD2.W310	Resolution 12 Bit, 8 input channels 0…20 mA	40 g
PCD2.W340	Resolution 12 Bit, 8 input channels selectable via jumper: 0…10 V, 0…20 mA or for 2-wire resistance themometer Pt 1000 for –50…+400 °C or Ni 1000 for –50…+200 °C	40 g
PCD2.W350	Resolution 12 Bit, 8 input channels for 2-wire resistance thermometer Pt 100 for –50…+600 °C or Ni 100 for –50…+250 °C	40 g
PCD2.W360	Resolution 12 Bit, 8 input channels for 2-wire resistance thermometer Pt 1000 for –50…+150 °C, resolution < 0.1 °C	40 g
	Analogue input modules, electrically isolated	
PCD2.W305	Resolution 12 Bit, 7 input channels 0…10 V	55 g
PCD2.W315	Resolution 12 Bit, 7 input channels 0…20 mA	55 g
PCD2.W325	Resolution 12 Bit, 7 input channels -10 V…+10 V	55 g
	Analogue output modules	
PCD2.W400	Resolution 8 Bit, simple modules: 4 channels 0…10 V (≥ 3 kΩ)	35 g
PCD2.W410	Resolution 8 Bit, universal modules: 4 channels selectable via jumpers, 0…10 V (≥ 3 kΩ) 0…20 mA (≤ 500 kΩ) or 4…20 mA (≤ 500 kΩ)	45 g
PCD2.W600	Resolution 12 Bit, simple modules: 4 channels 0…10 V (≥ 3 kΩ)	40 g
PCD2.W610	Resolution 12 Bit, universal modules: 4 channels selectable via jumpers, 0…10 V and –10…+10 V (≥ 3 kΩ) 0…20 mA (≤ 500 Ω), further "mid/low" jumper to select switching sequence	45 g
	Analogue output modules, electrically isolated	
PCD2.W605	Resolution 10 Bit, simple modules: 6 channels 0…10 V (≥ 3 kΩ)	60 g
PCD2.W615	Resolution 10 Bit, simple modules: 4 channels 0…20 V (≥ 500 kΩ)	60 g
PCD2.W625	Resolution 10 Bit, simple modules: 6 channels -10 V…+10 V (≥ 3 kΩ)	60 g
	Analogue input/output modules, electrically isolated	
PCD2.W500	Resolution 12 Bit, 2 input and 2 output channels for voltage signals	55 g
PCD2.W510 [1])	Resolution 12 Bit, 2 input channels for current signals and 2 output channels for voltage signals	55 g
PCD2.W525	4 analogue inputs 14 bit; 0…10 V, 0(4)…20 mA, Pt 500 / 1000, Ni 1000 + 2 analogue outputs, 12 bit; 0…10 V, 0(4)…20 mA	60 g
	Weighing modules	
PCD2.W710 [1])	Resolution 18 Bit, 1 weighing system for up to 4 weighing cells	40 g
PCD2.W720	Resolution 18 Bit, 2 weighing systems for up to 6 weighing cells	45 g
	Temperature modules	
PCD2.W745	Resolution 16 Bit, temperature module for up to 4 measurement inputs	40 g

1) Special version, supplied on request.

A

Type	Description	Weight
	Fast counter modules	
PCD2.H100	Counter module up to 20 kHz	40 g
PCD2.H110	General purpose counting and measuring module up to 100 kHz	42 g
	SSI encoder modules	
PCD2.H150	SSI interface module	42 g
	Motion control modules for stepper motors	
PCD2.H210	Motion control module for one stepper motor axis	42 g
	Motion control modules for servo drive	
PCD2.H310 [2])	Motion control module up to 100 kHz for servo-drives, 1 axis for 24 VDC encoder	48 g
PCD2.H311 [2])	Motion control module up to 100 kHz for servo-drives, 1 axis for 5 VDC/RS422 encoder	48 g
PCD2.H320	Motion control module up to 125 kHz for servo-drives, 2 axes for 24 VDC encoder	66 g
PCD2.H325	Motion control module up to 125 kHz for servo-drives, 2 axis for 5 VDC/RS422 encoder or SSI absolute angle transmitter (Slave only)	66 g
PCD2.H322	Motion control module up to 250 kHz for servo-drives, 1 axis for 24 VDC encoder	66 g
PCD2.H327	Motion control module up to 250 kHz for servo-drives, 1 axis for 5 VDC/RS422422 encoder or SSI absolute angle transmitter (Slave only)	66 g

2) Depending on the encoder, the 5 VDC supply may be loaded with up to 300 mA.

A

A.5 Address of Saia-Burgess Controls AG

Saia-Burgess Controls AG

Bahnhofstrasse 18
CH-3280 Murten / Switzerland

Tel: +41 26 / 672 72 72
Fax: +41 26 / 672 74 99

E-mail: pcd@saia-burgess.com
Home page: www.saia-pcd.com
Support: www.sbc-support.ch

Postal address for returns from customers of the Swiss Sales office:

Saia-Burgess Controls AG

Service Après-Vente
Bahnhofstrasse 18
CH-3280 Murten / Switzerland

A